DM ROMA
CONSULTING ENGINEERS

February 11, 2019

Amanda Lessard, Town Planner
Town of Windham
8 School Road
Windham, ME 04062

Re: Response to Review Comments
Windleigh Ridge Subdivision
Daigle Financial & Development - Applicant

Dear Amanda:

We have reviewed the memorandum to the Planning Board dated February 6, 2019 and a peer review memorandum prepared by Gorrill-Palmer dated February 1, 2019 and offer the following response:

Planner's Comments:

1. The applicant will deliver a check under separate cover for the application fees prior to the meeting.
2. Enclosed is a copy of the purchase and sale agreement for the "Lot A" parcel in its current form to be sold to the applicant. We propose that, as a condition of approval, the land between Lot A and the subject development property be transferred prior to the Planning Board signing the final mylar plan so that the plan accurately depicts the deed transfers after they have taken place. Lot A will be transferred to a different name than the applicant.
3. We understand that the Town will not obligate Lot A to become a member of the HOA as part of the Subdivision Approval, but we are voluntarily offering to include Lot A in the HOA so that all 4 lots who use the road will be responsible for maintenance.
4. Proposed monuments have been added to the Subdivision Plan.
5. Street trees have been added to the Roadway Plan & Profile Sheet.
6. Driveways have been added to the Roadway Plan & Profile Sheet.

Engineer Comments – Plans:

1. A revised Boundary Survey will be provided which shows the north arrow in the correct orientation.
2. Road monuments have been added to the Subdivision Plan.
3. The hammerhead does not touch the side lot line, so Lot 1 has sufficient frontage and the two parts of the parcel that make up Lot 1 are actually contiguous.
4. A "Beginning with Habitat Map" was provided to demonstrate that the project is not located within a significant wildlife habitat. This has been accepted by the Town as sufficient evidence for projects that we have been involved with in the past.
5. Agreed, no comment.
6. Agreed, no comment.
7. The Final signature plans will be stamped by an Engineer and Surveyor.
8. Note 16 was added to protect and mark the buffers.
9. Roadway grading has been revised to include an uphill ditch and cross-culvert that drains to a stone-bermed level lip spreader.

PO Box 1116, Windham, ME 04062 ○ (207) 310-0506 ○ dustin@dmroma.com

10. A stop sign has been added to the roadway plan & profile sheet.
11. The driveway to Lot A and the three proposed lots has been added to the Plan & Profile drawing.
12. Stumps and demolition debris will be hauled off the property and disposed of in accordance with all applicable solid waste regulations. The applicant is not proposing to bury stumps or debris on site.
13. No comment necessary.
14. A treatment plan is attached which shows the area that is being treated by the proposed buffers.
15. The forested stormwater buffers are proposed to be replanted and maintained as forest land. Note 16 was added to the Subdivision Plan to require the protection and replanting of the forested buffers.
16. A revised Inspection, Maintenance and Housekeeping Plan is attached which removes the sections that do not apply to this project.

Upon your review of this information, please let us know if you have any questions or require any additional information.

Sincerely,

DM ROMA CONSULTING ENGINEERS

Dustin Roma

Dustin M. Roma, P.E.
President

Bey — 207-939-1173

CONTRACT FOR PURCHASE AND SALE OF REAL ESTATE

Windham, Maine

Effective Date of Contract: August 22, 2018

RECEIVED OF Daigle Financial & Development, its successors and/or assigns, hereinafter called the **Purchasers**, the sum of [redacted] earnest money and in part payment on account of the purchase price of the herein described real estate, hereinafter called the Property, being land only situated off of Nash Road, Windham, Cumberland County, State of Maine. The said earnest money or deposit is received and held by the Seller's attorney, as escrow agent, subject to all of the following conditions of this Contract.

1. PARTIES: The **Seller** or **Sellers** herein is Janice L. Beattie (fka Gibson), living at and having a mailing address of 3 Nash Road, Windham, ME.
   The **Purchaser** or **Purchasers** herein is Daigle Financial & Development, LLC a duly

   organized Maine Limited Liability Company, and having a mailing address of PO Box 142, Westbrook, ME 04098.

2. PERIOD OF ACCEPTANCE: This Contract shall be construed as an offer to contract when signed by the first Party, either Purchaser or Seller. Unless accepted by signature of the other Party within five (5) days of the first Party's signing, the offer shall become void. Upon signature by both Parties the offer shall become a binding Contract for the Purchase and Sale of Real Estate and having an Effective Date of the same date as when signed by the second party, whether Purchaser or Seller.

3. PURCHASE AND SALE OBLIGATIONS: The Parties hereby agree that the Seller shall sell and the Purchaser shall buy, **UPON THE TERMS AND CONDITIONS AS HEREIN SET FORTH**, the herein described real estate, hereinafter called the Property, being land and improvements thereon situated at 3 Nash Road, Windham, Cumberland County Maine.

4. DESCRIPTION OF PROPERTY: The Property is described as being land with improvements thereon, located at 3 Nash Road, Windham, Cumberland County, Maine, being a portion of the premises described in deeds recorded in the Cumberland County Registry of Deeds in Book 9885, Page 180; Book 8924, Page 317 and Book 8924, Page 318, identified as Lot #3 on survey plan recorded in Plan Book 217, Page 453, attached hereto.

5. PURCHASE PRICE: The **TOTAL** purchase price shall be [redacted], and shall be paid as follows:

   a. [redacted] earnest money to be deposited with the Seller's attorney, to be paid upon acceptance of this Contract. The deposit shall be held by Seller's attorney until closing.

   b. [redacted] is to be paid by

certified or bank check upon delivery of the Deed.

c. This contract is not subject to financing.

6. TITLE AND DATE OF CLOSING: A good and sufficient warranty deed with covenant showing good and merchantable title in accordance with the standards adopted by the Maine Bar Association shall be delivered to Purchaser or Purchaser's assignee and **this transaction shall be closed and the Purchaser shall pay the balance due and execute all necessary papers six (6) months from the effective date of this contract**, unless otherwise agreed upon between the Purchaser and Seller. Further, provided that should Seller find another property to purchase and contract to purchase, Seller may close on a sooner date in order to coordinate closing on Seller's purchase, to allow for proceeds from this transaction to be available to Seller for purchase of the new property. Seller shall, in such event, give Purchaser at least 2 weeks' notice in advance of such closing to allow Purchaser to make arrangements to be ready for closing.

7. SELLER'S OBLIGATION TO CURE TITLE DEFECTS: If Seller is unable to convey good and merchantable title in accordance with the provisions of the previous paragraph by reason of a title defect, then the Seller shall have a reasonable time period, not to exceed sixty (60) days, from the time the defect is discovered, unless otherwise agreed to by both parties, to remedy the title, after which time, if such defect is not corrected so that there is merchantable title, the Purchaser may, at his option, withdraw said earnest money and be relieved from all obligations. The Seller hereby agrees to make a good-faith effort to cure any title defect during such time period. Seller shall pay any expenses reasonably required to cure any title defect.

8. DEED: The Property shall be conveyed by a warranty deed, and shall be free and clear of all liens, attachments, judgments, restrictions, rights of way, tenancies, temporary estates, and other encumbrances, but shall be **subject to** all applicable land use regulations, reasonable restrictive covenants of record, and public utility easements serving the premises of record, as well as any items referred to in this document or the legal description in the Seller's deed for the Property.

9. POSSESSION/OCCUPANCY: Possession shall be transferred and delivered at closing unless otherwise agreed to in writing between the parties, provided, however, that the Seller shall have a two (2) week period following closing to retain possession in order to make proper arrangements to relocate, and such period shall be rent free to Seller. This condition shall survive the closing.

10. RISK OF LOSS: The risk of loss or damage to the Property by fire or otherwise, including condemnation by governmental authority, until transfer of title, is assumed by the Seller. The above described Property is to be delivered in substantially the same condition as of the date of this contract unless otherwise stated.

11. PRORATIONS: The following items shall be prorated as of closing:
    a. Real estate taxes based upon the municipality's fiscal year, as of closing.

12. PROPERTY DISCLOSURE FORM: Purchaser acknowledges receipt of Property Disclosure Form. Purchaser waives all inspections and contingencies. Purchaser acknowledges that the Property is being sold "as is, where is" without any representations or warranties by Seller as to condition or habitability.

13. DISPUTE RESOLUTION: If a dispute arises concerning the provisions of this contract or the performance of the parties, then the parties agree to settle this dispute by jointly paying for one of the following (check only one):

a. Binding arbitration as regulated by the Maine Uniform Arbitration Act, with the parties agreeing to accept as final the arbitrator's decision [ ];

b. Nonbinding arbitration, with the parties free to not accept the arbitrator's decision and to seek satisfaction through other means, including a lawsuit [ ]; or

c. Mediation, with the parties agreeing to enter into good faith negotiations through a neutral mediator in order to attempt to resolve their differences [X].

14. DEFAULT: Should Purchaser fail to make any of the payments, or any part thereof, or to perform any of the covenants on his part made or entered into, this contract shall, at the option of the Seller, be terminated without in any way affecting Seller's rights against Purchaser for additional damages, or Seller's right to employ all available legal and equitable remedies. Should Seller fail to perform any of the covenants on his part made or entered into, this contract shall, at the option of the Purchaser, be terminated without in any way affecting Purchaser's rights against Seller for damages, or Purchaser's right to employ all available legal and equitable remedies, including specific performance.

15. TIME: Time is an essential part of this contract.

16. HEIRS/ASSIGNS: All covenants and agreements herein contained shall extend to, enure to the benefit of, and be obligatory and binding upon the heirs, devisees, personal representatives, successors and assigns of the respective parties.

17. GOVERNING LAW: This contract, executed in duplicate originals, shall be governed and construed in accordance with the laws of the State of Maine and sets forth the entire agreement and contract between the Purchaser and Seller.

18. PRIOR STATEMENTS: This contract completely expresses the obligation of the parties, and this contract is entered into by each party after opportunity for investigation, neither party relying on any statements or representations not contained in this contract made by the other or on his behalf. Any verbal representations, statements and agreements are not valid unless contained herein.

19. DEED/TRANSFER TAX: The Seller shall prepare the Deed and Transfer Tax Form, and is responsible for costs associated with same. Purchaser will be responsible for preparing this contract and the normal closing documents, including closing statement, and is responsible for costs associated with same. Each party shall pay their share of any transfer tax.

20. NO BROKER: Seller hereby represents and warrants to Purchaser and Purchaser hereby represents and warrants to Seller that no real estate broker has been involved with the sale contemplated hereunder and that no real estate broker is entitled to any commission with respect to this sale. In the event that any real estate broker shall claim to be entitled to any fee or commission with respect to this sale, then the party on whose behalf such broker shall claim to have acted shall defend against such claim and shall indemnify and hold the other party harmless from and against any such claim. This representation shall survive the closing.

21. OTHER CONTINGENCIES (please initial any additions): NONE

A copy of this Agreement is to be received by all parties and, by signature, receipt of a copy is hereby acknowledged. If not fully understood, contact an attorney. This is a Maine contract and shall be construed according to the laws of Maine.

Sellers acknowledge that State of Maine law requires buyers of property owned by non-resident Sellers to withhold a prepayment of capital gains tax unless a waiver has been obtained by Sellers from the State of Maine Bureau of Taxation.

NOTICE: THIS MAY BE A LEGALLY BINDING CONTRACT. READ IT CAREFULLY. YOU MAY WISH TO CONSULT AN ATTORNEY BEFORE SIGNING THIS DOCUMENT. A COPY OF THIS CONTRACT IS TO BE RECEIVED BY BOTH PARTIES, AND BY SIGNATURE, RECEIPT OF A COPY IS HEREBY ACKNOWLEDGED.

Purchaser, having waived inspections and contingencies regarding the Property, hereby offers to purchase and agrees to purchase the Property at the price and upon the terms and conditions set forth herein.

Daigle Financial & Development, LLC

Date: 8-22-18

By: Benjamin Daigle, Member

Witness Julie Pease Galipeau

Seller hereby offers to sell to Purchaser, accepts the offer to purchase of Purchaser, and agrees to deliver the above described Property and deed to the Property at the price and upon the terms and conditions set forth herein.

Janice L. Beattie - Seller

Date: 8-22-18

Witness Sydney Gagnon

DM ROMA
CONSULTING ENGINEERS

INSPECTION, MAINTENANCE, AND HOUSEKEEPING PLAN

WINDLEIGH RIDGE SUBDIVISION
WINDLEIGH RIDGE DRIVE
WINDHAM, MAINE

Responsible Party

Owner: Daigle Financial & Development, LLC
85 Nash Road
Windham, ME 04062

The owners are responsible for the maintenance of all stormwater management structures and related site components and the keeping of a maintenance log book with service records until such time that a homeowner's association is created. Records of all inspections and maintenance work performed must be kept on file with the owner and retained for a minimum of five years. The maintenance log will be made available to the Town and Maine Department of Environmental Protection (MDEP) upon request. At a minimum, the maintenance of stormwater management systems will be performed on the prescribed schedule.

The procedures outlined in this plan are provided as a general overview of the anticipated practices to be utilized on this site. In some instances, additional measures may be required due to unexpected conditions. *The Maine Erosion and Sedimentation Control BMP* and *Stormwater Management for Maine: Best Management Practices* Manuals published by the MDEP should be referenced for additional information.

During Construction

1. **Inspection and Corrective Action:** It is the contractor's responsibility to comply with the inspection and maintenance procedures outlined in this section. Inspection shall occur on all disturbed and impervious areas, erosion control measures, material storage areas that are exposed to precipitation, and locations where vehicles enter or exit the site. These areas shall be inspected at least once a week as well as 24 hours before and after a storm event and prior to completing permanent stabilization measures. A person with knowledge of erosion and stormwater control, including the standards and conditions in the permit, shall conduct the inspections.

2. **Maintenance:** Erosion controls shall be maintained in effective operating condition until areas are permanently stabilized. If best management practices (BMPs) need to be repaired, the repair work should be initiated upon discovery of the problem but no later than the end of the next workday. If BMPs need to be maintained or modified, additional

BMPs are necessary, or other corrective action is needed, implementation must be completed within seven calendar days and prior to any rainfall event.

3. **Documentation:** A report summarizing the inspections and any corrective action taken must be maintained on site. The log must include the name(s) and qualifications of the person making the inspections; the date(s) of the inspections; and the major observations about the operation and maintenance of erosion and sedimentation controls, materials storage areas, and vehicle access points to the parcel. Major observations must include BMPs that need maintenance, BMPs that failed to operate as designed or proved inadequate for a particular location, and location(s) where additional BMPs are needed. For each BMP requiring maintenance, BMP needing replacement, and location needing additional BMPs, note in the log the corrective action taken and when it was taken. The log must be made accessible to MDEP or Town staff, and a copy must be provided upon request. The owner shall retain a copy of the log for a period of at least three years from the completion of permanent stabilization.

Housekeeping

1. **Spill prevention:** Controls must be used to prevent pollutants from construction and waste materials on site to enter stormwater, which includes storage practices to minimize exposure of the materials to stormwater. The site contractor or operator must develop, and implement as necessary, appropriate spill prevention, containment, and response planning measures.

2. **Fugitive sediment and dust:** Actions must be taken to ensure that activities do not result in noticeable erosion of soils or fugitive dust emissions during or after construction. Oil may not be used for dust control, but other water additives may be considered as needed. A stabilized construction entrance (SCE) should be included to minimize tracking of mud and sediment. If off-site tracking occurs, public roads should be swept immediately and no less than once a week and prior to significant storm events. Operations during dry months, that experience fugitive dust problems, should wet down unpaved access roads once a week or more frequently as needed with a water additive to suppress fugitive sediment and dust.

3. **Debris and other materials:** Minimize the exposure of construction debris, building and landscaping materials, trash, fertilizers, pesticides, herbicides, detergents, sanitary waste and other materials to precipitation and stormwater runoff. These materials must be prevented from becoming a pollutant source.

4. **Excavation de-watering:** Excavation de-watering is the removal of water from trenches, foundations, coffer dams, ponds, and other areas within the construction area that retain water after excavation. In most cases the collected water is heavily silted and hinders correct and safe construction practices. The collected water removed from the ponded area, either through gravity or pumping, must be spread through natural wooded buffers

or removed to areas that are specifically designed to collect the maximum amount of sediment possible, like a cofferdam sedimentation basin. Avoid allowing the water to flow over disturbed areas of the site. Equivalent measures may be taken if approved by the Department.

5. **Authorized Non-stormwater discharges:** Identify and prevent contamination by non-stormwater discharges. Where allowed non-stormwater discharges exist, they must be identified and steps should be taken to ensure the implementation of appropriate pollution prevention measures for the non-stormwater component(s) of the discharge. Authorized non-stormwater discharges are:
   (a) Discharges from firefighting activity;
   (b) Fire hydrant flushings;
   (c) Vehicle washwater if detergents are not used and washing is limited to the exterior of vehicles (engine, undercarriage and transmission washing is prohibited);
   (d) Dust control runoff in accordance with permit conditions and Appendix (C)(3);
   (e) Routine external building washdown, not including surface paint removal, that does not involve detergents;
   (f) Pavement washwater (where spills/leaks of toxic or hazardous materials have not occurred, unless all spilled material had been removed) if detergents are not used;
   (g) Uncontaminated air conditioning or compressor condensate;
   (h) Uncontaminated groundwater or spring water;
   (i) Foundation or footer drain-water where flows are not contaminated;
   (j) Uncontaminated excavation dewatering (see requirements in Appendix C(5));
   (k) Potable water sources including waterline flushings; and
   (l) Landscape irrigation.

6. **Unauthorized non-stormwater discharges:** Approval from the MDEP does not authorize a discharge that is mixed with a source of non-stormwater, other than those discharges in compliance with Section 6 above. Specifically, the MDEP's approval does not authorize discharges of the following:
   (a) Wastewater from the washout or cleanout of concrete, stucco, paint, form release oils, curing compounds or other construction materials;
   (b) Fuels, oils or other pollutants used in vehicle and equipment operation and maintenance;
   (c) Soaps, solvents, or detergents used in vehicle and equipment washing; and
   (d) Toxic or hazardous substances from a spill or other release.

<u>Post construction</u>

1. **Inspection and Corrective Action:** All measures must be maintained by the owner in effective operating condition. A qualified third-party inspector hired by the owner shall at least annually inspect the stormwater management facilities. This person should have knowledge of erosion and stormwater control including the standards and conditions of the site's approvals. The inspector shall be certified through the MDEP to inspect the

stormwater infrastructure. The following areas, facilities, and measures must be inspected, and identified deficiencies must be corrected. Areas, facilities, and measures other than those listed below may also require inspection on a specific site.

A. **Vegetated Areas:** Inspect vegetated areas, particularly slopes and embankments, early in the growing season or after heavy rains to identify active or potential erosion problems. Replant bare areas or areas with sparse growth. Where rill is evident, armor the area with an appropriate lining or divert the erosive flows to on-site areas able to withstand the concentrated flows.

B. **Ditches, Swales, and Open Channels:** Inspect ditches, swales, and other open channels in the spring, late fall, and after heavy rains to remove any obstructions to flow, remove accumulated sediments and debris, control vegetative growth that could obstruct flow, and repair any erosion of the ditch lining. Vegetated ditches must be mowed at least annually or otherwise maintained to control the growth of woody vegetation and maintain flow capacity. Any woody vegetation growing through riprap linings must also be removed. Repair any slumping side slopes as soon as practicable. If the ditch has a riprap lining, replace riprap on areas where any underlying filter fabric or underdrain gravel is showing through the stone or where stones have dislodged. The channel must receive adequate routine maintenance to maintain capacity and prevent or correct any erosion of the channel's bottom or side slopes.

C. **Culverts:** Inspect culverts in the spring, late fall, and after heavy rains to remove any obstructions to flow; remove accumulated sediments and debris at the inlet, at the outlet, and within the conduit; and to repair any erosion damage at the culvert's inlet and outlet.

D. **Regular Maintenance:** Clear accumulations of winter sand along roadway once a year, preferably in the spring. Accumulations on pavement may be removed by pavement sweeping. Accumulations of sand along pavement shoulders may be removed by grading excess sand to the pavement edge and removing it manually or by a front-end loader.

E. **Documentation:** Keep a log (report) summarizing inspections, maintenance, and any corrective actions taken. The log must include the date on which each inspection or maintenance task was performed, a description of the inspection findings or maintenance completed, and the name of the inspector or maintenance personnel performing the task. If a maintenance task requires the clean-out of any sediments or debris, indicate where the sediment and debris was disposed after removal. The log must be made accessible to Town staff upon request. The permittee shall retain a copy of the log for a period of at least five years from the completion of permanent stabilization. Attached is a sample log.

Municipalities with separate storm sewer systems regulated under the Maine Pollutant Discharge Elimination System (MPDES) Program may report on all regulated systems under their control as part of their required annual reporting in lieu of separate certification of each system. Municipalities not regulated by the MPDES Program, but that are responsible for maintenance of permitted stormwater systems, may report on multiple stormwater systems in one report.

Duration of Maintenance

Perform maintenance as described.

MAINTENANCE LOG

WINDLEIGH RIDGE SUBDIVISION
WINDHAM, MAINE

The following stormwater management and erosion control items shall be inspected and maintained as prescribed in the Maintenance Plan with recommended frequencies as identified below. The owner is responsible for keeping this maintenance log on file for a minimum of five years and shall provide a copy to the Town and MDEP upon request. Inspections are to be performed by a qualified third-party inspector and all corrective actions shall be performed by personnel familiar with stormwater management systems and erosion controls.

Maintenance Item	Maintenance Event	Date Performed	Responsible Personnel	Comments
Vegetated Areas	Inspect slopes and embankments early in Spring.			
Ditches, swales, and other open channels	Inspect after major rainfall event producing 1" of rain in two hours.			
	Inspect for erosion or slumping & repair			
	Mowed at least annually.			
Culverts	Inspect semiannually and after major rainfall.			
	Repair erosion at inlet or outlet of pipe.			
	Repair displaced riprap.			
	Clean accumulated sediment in culverts when >20% full.			
Forested Buffers	Check after significant rainfall event >1” to ensure that flow is not channelizing.			
	Remove dead trees as necessary			
	Inspect semi-annually for erosion or sediment accumulation and repair as necessary.			
	Check stone bermed level lip spreader to ensure that stormwater is entering the buffer in sheet flow			
Regular Maintenance	Clear accumulation of winter sand in paved areas annually.			

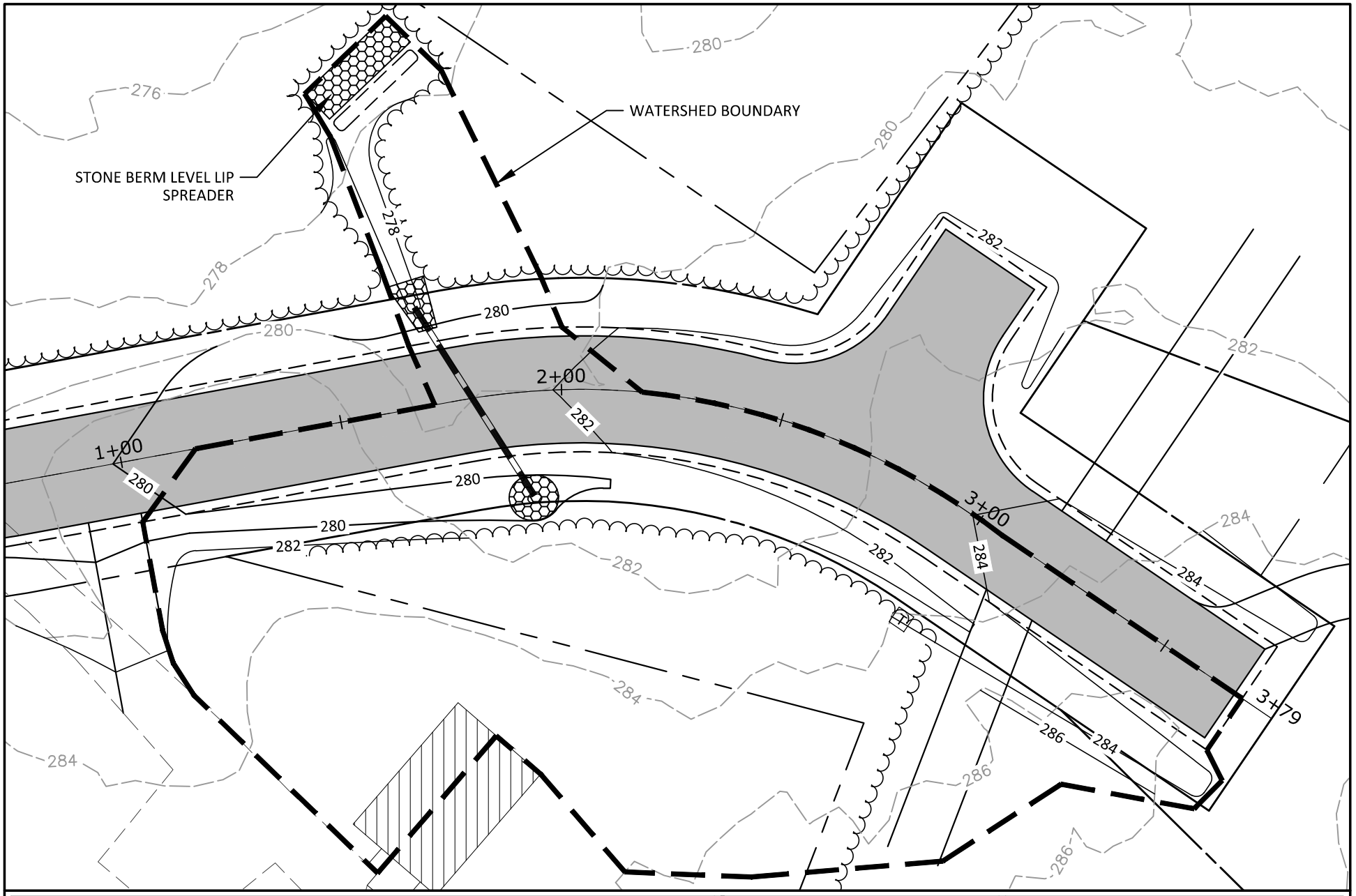

LEVEL SPREADER WATERSHED

WINDLEIGH RIDGE SUBDIVISION
WINDHAM, MAINE

FOR:
DAIGLE FINANCIAL & DEVELOPMENT, LLC

SCALE: 1"=30'
DATE: 02-11-2019
JOB NUMBER: 18029

DM ROMA
CONSULTING ENGINEERS
P.O. BOX 1116
WINDHAM, ME 04062
(207) 310 - 0506

NOTES:

Forested Buffer - Level Spreader Sizing

Soil:	Paxton	
Class:	Sandy Loam	
HSG:	C	
Buffer Length=	75	ft
Berm Length Per Acre Impervious =	125	ft
Berm Length Per Acre Landscape =	35	ft
Tributary Impervious Area =	4684	sf
Tributary Landscaped Area =	9613	sf
Required Berm Length:	21	ft
Provided Berm Length:	25	ft

BUFFER TREATMENT CALCULATIONS:

TOTAL DEVELOPED AREA:	109,475 SF
DEVELOPED AREA TREATED:	94,550 SF
PERCENT DEVELOPED AREA TREATED:	86 %
TOTAL IMPERVIOUS AREA:	22,595 SF
IMPERVIOUS AREA TREATED:	17,470 SF
PERCENT IMPERVIOUS AREA TREATED:	77 %

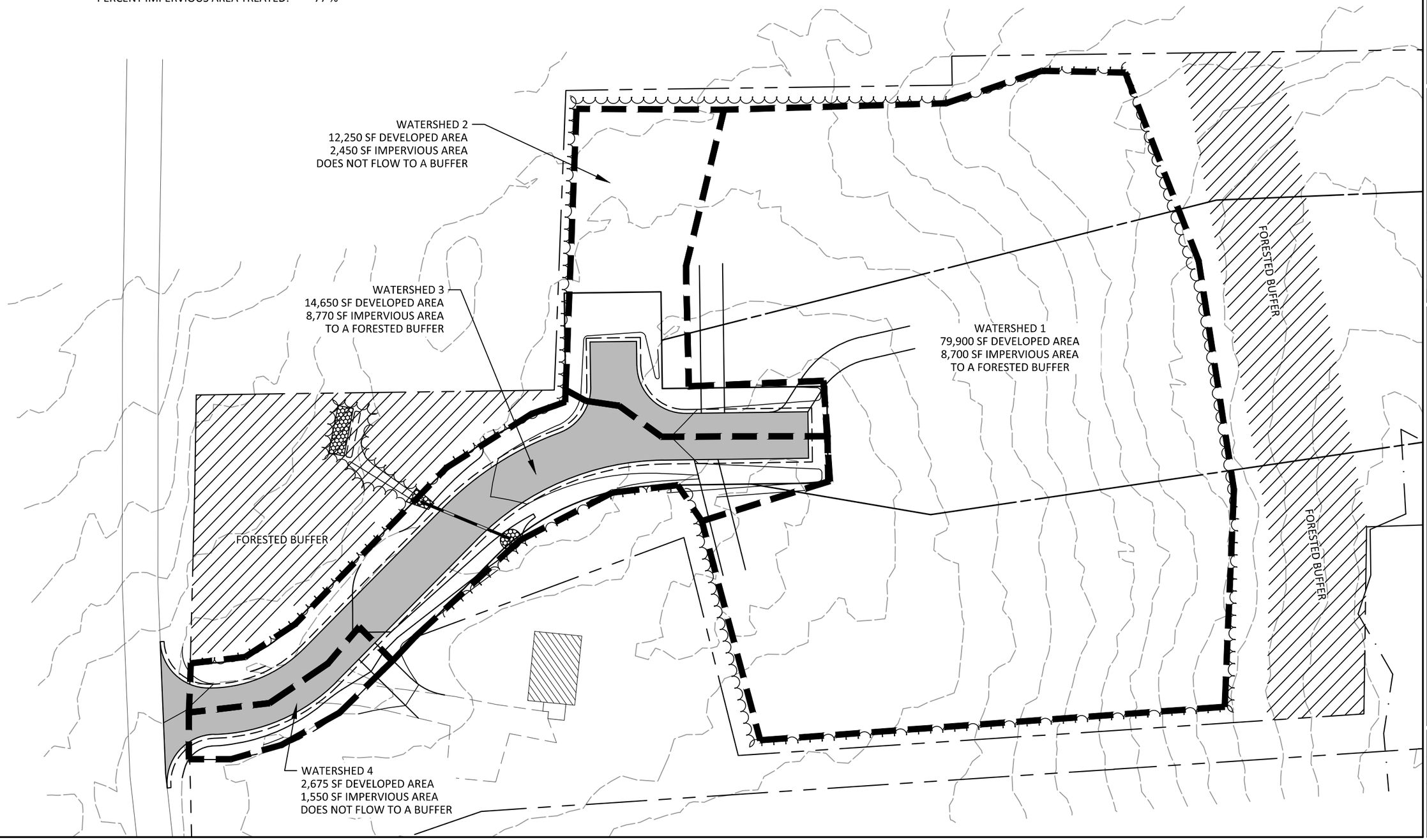

DM ROMA
CONSULTING ENGINEERS
P.O. BOX 1116
WINDHAM, ME 04062
(207) 310 - 0506

REV	DATE	BY	DESCRIPTION
A	2-11-19	DMR	SUBMITTED TO TOWN

STORMWATER BUFFER MAP

WINDLEIGH RIDGE SUBDIVISION
WINDHAM, MAINE

FOR RECORD OWNER:
DAIGLE FINANCIAL & DEVELOPMENT, LLC
85 NASH ROAD
WINDHAM, ME 04062

1" = 80'
SCALE:

2-11-2018
DATE:

SHEET 1 OF 1

SW-1

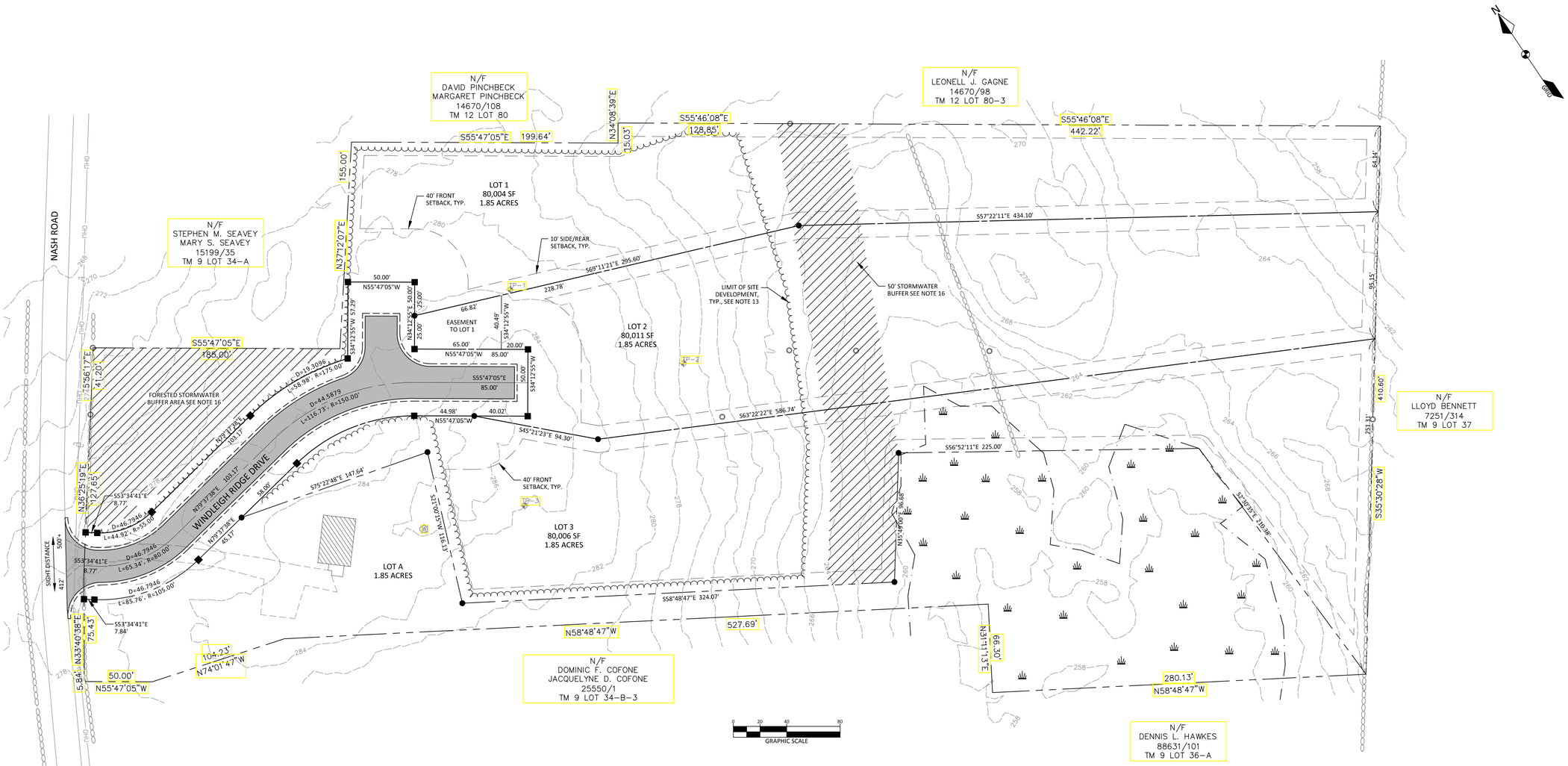

GENERAL NOTES:

1. THE OWNERS OF RECORD OF THE PROPERTY ARE DAIGLE FINANCIAL & DEVELOPMENT, LLC BY DEED RECORDED IN THE CUMBERLAND COUNTY REGISTRY OF DEEDS BOOK 34775 PAGE 332 AND JANICE L. BEATTIE BY DEED RECORDED IN THE CUMBERLAND COUNTY REGISTRY OF DEEDS BOOK 9885 PAGE 180.
2. TOTAL AREA OF THE PARCEL IS APPROXIMATELY 7.84 ACRES.
3. PARCEL TAX MAP REFERENCE: TOWN OF WINDHAM ASSESSORS MAP 9, LOTS 34 & 34B-01.
4. PLAN REFERENCES:
   A) BOUNDARY SURVEY AND AMENDED PROPERTY DIVISION, LAND OF JANICE L. BEATTIE, PREPARED BY LAND SERVICES, INC., DATED SEPTEMBER 2017 AND RECORDED IN CUMBERLAND COUNTY REGISTRY OF DEEDS PLAN BOOK 217 PAGE 453.
   B) BOUNDARY SURVEY OF 3 NASH ROAD WINDHAM, MAINE, FOR DAIGLE FINANCIAL AND DEVELOPMENT, LLC, PREPARED BY SURVEY, INC., DATED AUGUST 2018.
5. HORIZONTAL DATUM: MAINE STATE PLANE, WEST ZONE, NAD83, U.S. FEET.
6. VERTICAL DATUM: NORTH AMERICAN VERTICAL DATUM OF 1988 (NAVD88)
7. BOUNDARY SHOWN HEREON IS BASED ON PLAN REFERENCE 4B.
8. ELEVATION CONTOURS SHOWN HEREON ARE LIDAR CONTOURS OBTAINED FROM MAINE STATE OFFICE OF GIS.
9. THE PROPERTY IS LOCATED IN THE FARM ZONING DISTRICT.
10. SPACE AND BULK REQUIREMENTS: FARM DISTRICT

MIN LOT SIZE:	80,000 S.F.
NET RESIDENTIAL DENSITY:	60,000 SF
MIN STREET FRONTAGE:	200 FT
MIN FRONT YARD:	40 FT
MIN SIDE/REAR YARD:	10 FT
MAX BUILDING HEIGHT:	35 FT
MAX BUILDING COVERAGE:	25%

11. WETLAND DELINEATION PERFORMED BY MAINELY SOILS, LLC IN AUGUST 2018.
12. ALL BUILDINGS WILL REQUIRE THE INSTALLATION OF A ROOFLINE DRIP EDGE FILTER FOR STORMWATER TREATMENT.
13. THE CLEARING LIMITS SHOWN ON THIS PLAN SHALL BE MAINTAINED FOR A PERIOD OF FIVE (5) YEARS FROM TEH DATE OF PLANNING BOARD APPROVAL, AND IN ACCORDANCE WITH SECTION 911.E.1.A OF THE LAND USE ORDINANCE.

GENERAL NOTES CONTINUED:

14. ALL ROADS IN THIS SUBDIVISION SHALL REMAIN PRIVATE ROADS TO BE MAINTAINED BY THE DEVELOPER, LOT OWNERS, HOME ASSOCIATION, OR ROAD ASSOCIATION, UNTIL SUCH TIME AS THE ROADS MAY BE OFFERED FOR ACCEPTANCE BY THE TOWN COUNCIL AS TOWN STREETS AFTER A DETERMINATION BY THE TOWN THAT ALL APPLICABLE STREET CONSTRUCTION STANDARDS HAVE BEEN MET.

15. APPROVAL BY THE PLANNING BOARD OF THIS SUBDIVISION PLAN SHALL NOT BE DEEMED TO CONSTITUTE OR BE EVIDENCE OF ANY ACCEPTANCE BY THE TOWN OF WINDHAM OF ANY STREET, EASEMENT, OPEN SPACE, PARKS, PLAYGROUNDS, OR OTHER RECREATION AREAS SHOWN ON THIS PLAN.

16. STORMWATER BUFFERS SHOWN HEREON SHALL BE MAINTAINED IN A NATURAL FORESTED CONDITION INCLUDING A NATURAL DUFF LAYER ON THE GROUND SURFACE. IN AREAS WHERE TREE CLEARING HAS OCCURRED WITHIN THE DEPICTED STORMWATER BUFFERS PRIOR TO THE SUBDIVISION APPLICATION, THE BUFFERS SHALL BE RE-PLANTED WITH A GRID OF DECIDUOUS AND EVERGREEN TREES AT A SPACING OF AT LEAST ONE TREE EVERY 30 FEET ON CENTER THROUGHOUT THE BUFFER AREA. DECIDUOUS TREES SHALL BE A MINIMUM 1" CALIPER AND EVERGREEN TREES SHALL BE A MINIMUM OF 4 FEET IN HEIGHT. STORMWATER BUFFERS SHALL BE TEMPORARILY MARKED PRIOR TO CONSTRUCTION TO ENSURE THEY WILL BE PROTECTED, AND PERMANENT MARKERS SHALL BE SET IN THE FORM OF CAPPED 1/4 INCH REBAR AFTER TREE CLEARING TO ENSURE THAT THE BUFFERS ARE CLEARLY IDENTIFIED ON THE GROUND.

NET RESIDENTIAL DENSITY CALCULATIONS:

GROSS LAND AREA:	260,876 S.F.
DEDUCTIONS:	
1. RIGHT-OF-WAY	21,605 S.F.
2. STEEP SLOPES (OVER 25%)	0 S.F.
3. 100-YEAR FLOOD PLAIN	0 S.F.
4. RESOURCE PROTECTION DISTRICT	0 S.F.
5. VERY POORLY DRAINED SOILS	3,214 S.F.
6. SURFACE WATERBODIES	0 S.F.
7. SIGNIFICANT WILDLIFE HABITAT	0 S.F.
8. ENDANGERED BOTANICAL RESOURCES	0 S.F.
TOTAL NET AREA:	236,057 S.F.
REQUIRED NET AREA PER DWELLING:	60,000 S.F.
MAXIMUM ALLOWABLE LOTS/DWELLINGS:	3.93
NUMBER OF LOTS PROPOSED:	3

WAIVERS GRANTED:

1. SECTION 911-M-5-B-b-ii: SIDEWALKS OR SHOULDERS PERFORMANCE STANDARD
2. MINOR LOCAL STREET CONSTRUCTION STANDARDS - MINIMUM CENTERLINE RADIUS

CONDITIONS OF SUBDIVISION APPROVAL

1. APPROVAL IS DEPENDENT UPON, AND LIMITED TO, THE PROPOSALS AND PLANS CONTAINED IN THE APPLICATION DATED JANUARY 22, 2019, AS AMENDED AND SUPPORTING DOCUMENTS AND ORAL REPRESENTATIONS SUBMITTED AND AFFIRMED BY THE APPLICANT, AND CONDITIONS, IF ANY, IMPOSED BY THE PLANNING BOARD, AND ANY VARIATION FROM SUCH PLANS, PROPOSALS, AND SUPPORTING DOCUMENTS AND REPRESENTATIONS ARE SUBJECT TO REVIEW AND APPROVAL BY THE PLANNING BOARD OR THE TOWN PLANNER IN ACCORDANCE WITH SECTION 913 OF THE LAND USE ORDINANCE.
2. APPROVAL IS SUBJECT TO THE REQUIREMENTS OF THE POST-CONSTRUCTION STORMWATER ORDINANCE, CHAPTER 144. ANY PERSON OWNING, OPERATING, LEASING OR HAVING CONTROL OVER STORMWATER MANAGEMENT FACILITIES REQUIRED BY THE POST-CONSTRUCTION STORMWATER MANAGEMENT PLAN MUST ANNUALLY ENGAGE THE SERVICES OF A QUALIFIED THIRD-PARTY INSPECTOR WHO MUST CERTIFY COMPLIANCE WITH THE POST-CONSTRUCTION STORMWATER MANAGEMENT PLAN ON OR BY MAY 1ST OF EACH YEAR.

APPROVED: TOWN OF WINDHAM PLANNING BOARD

_____

_____

_____

_____

_____

_____

_____

_____

_____

_____

LEGEND

EXISTING		PROPOSED
	PROPERTY LINE/R.O.W.	
	ABUTTER PROPERTY LINE	
	SETBACK	
	EASEMENT LINE	
	GRANITE MONUMENT	
	IRON PIN/DRILL HOLE	
	CENTERLINE	
	BUILDING	
	EDGE OF PAVEMENT/CURB	
	EDGE OF GRAVEL	
	EDGE OF WETLANDS	
200	CONTOUR LINE	
	TREELINE	
	UTILITY POLE	
OHU	OVERHEAD UTILITIES	

STATE OF MAINE
DUSTIN M. ROMA
No. 12131
LICENSED
PROFESSIONAL ENGINEER

DM ROMA
CONSULTING ENGINEERS
P.O. BOX 1116
WINDHAM, ME 04062
(207) 310 - 0506

REV	DATE	BY	DESCRIPTION
A	9-4-18	DMR	ISSUED FOR SKETCH PLAN REVIEW
B	2-11-19	DMR	REVISED PER TOWN REVIEW

SUBDIVISION PLAN

WINDLEIGH RIDGE SUBDIVISION
WINDHAM, MAINE

FOR RECORD OWNER:
DAIGLE FINANCIAL & DEVELOPMENT, LLC
85 NASH ROAD
WINDHAM, ME 04062

18029
JOB NUMBER:

1" = 40'
SCALE:

2-11-2019
DATE:

SHEET 3 OF 5

SB-1

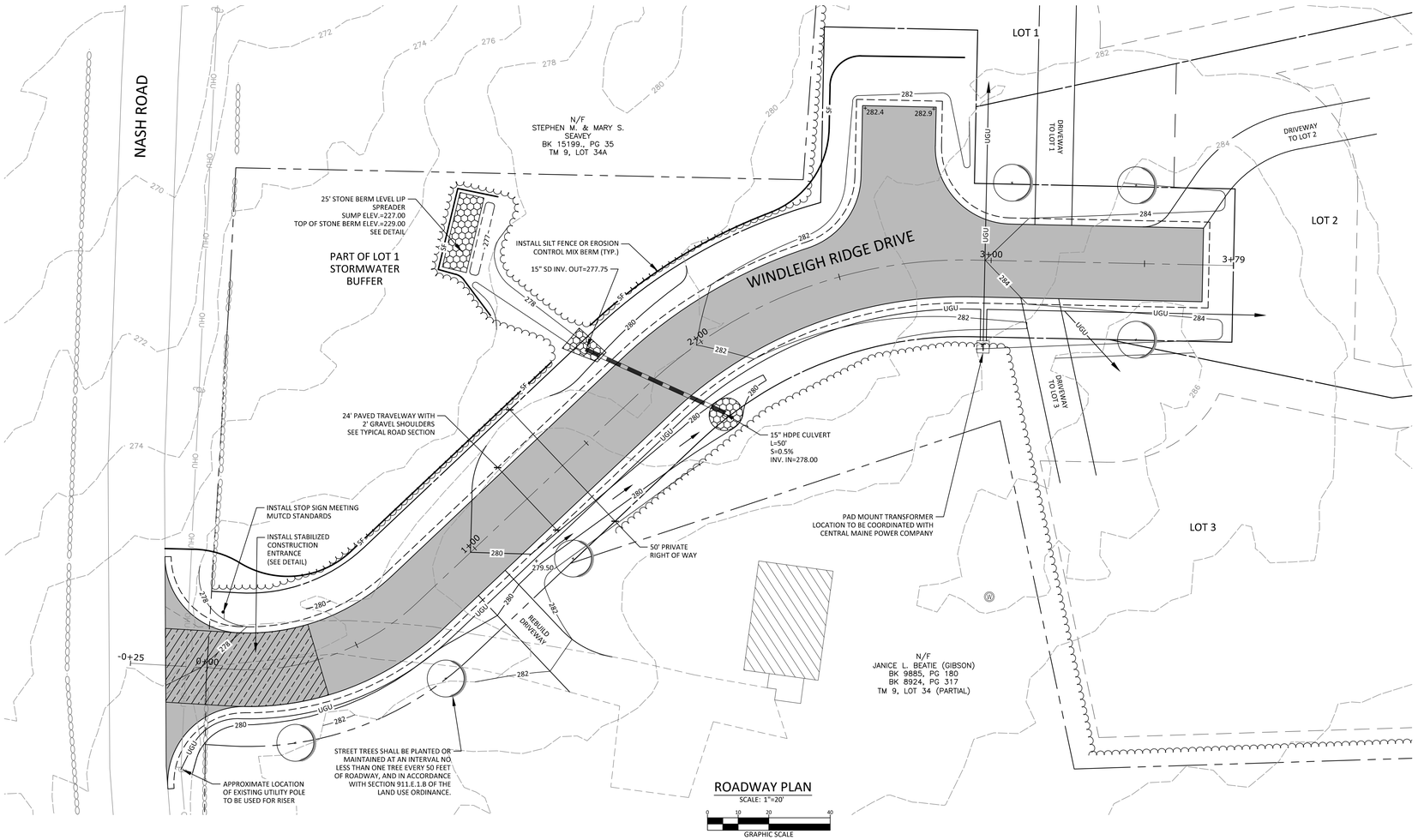

ROADWAY PLAN
SCALE: 1"=20'
GRAPHIC SCALE

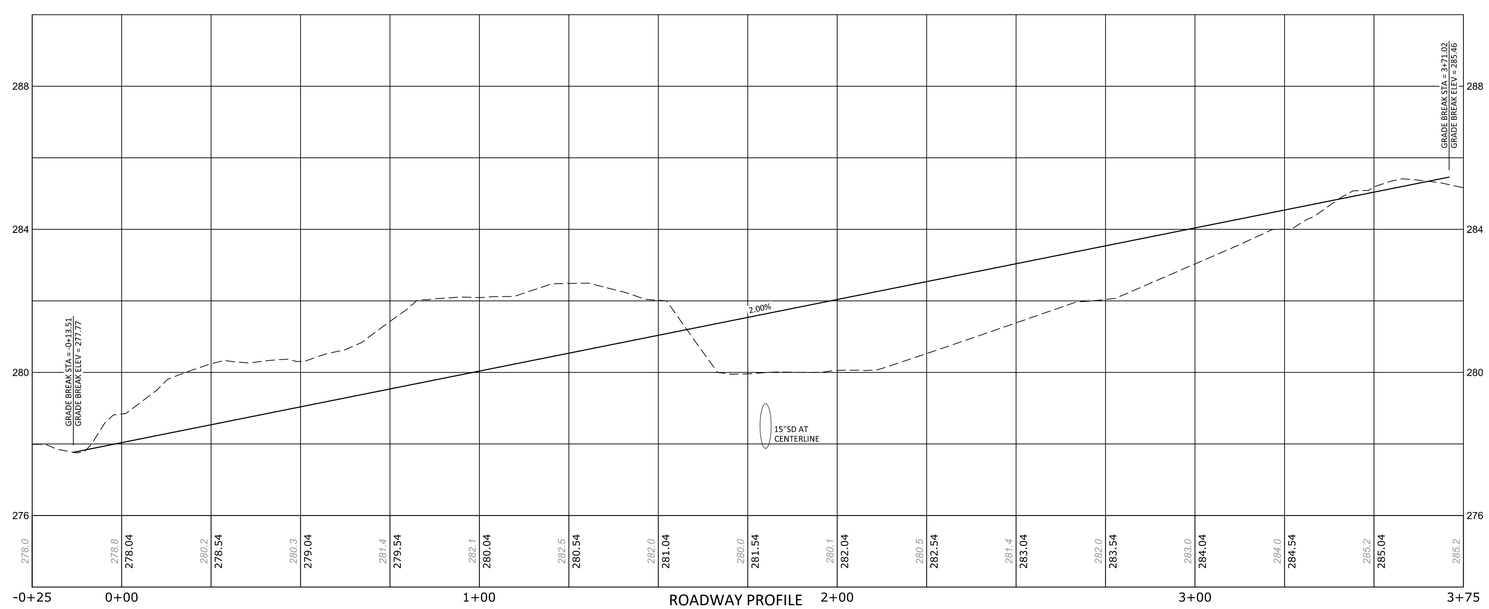

ROADWAY PROFILE
SCALE: HORIZ. 1"=20'
VERT. 1"=2'

LEGEND

EXISTING		PROPOSED
	PROPERTY LINE/R.O.W.	
	ABUTTER PROPERTY LINE	
	EASEMENT LINE	
	GRANITE MONUMENT	
	IRON PIN/DRILL HOLE	
	CENTERLINE	
	EDGE OF PAVEMENT/CURB	
	EDGE OF GRAVEL	
200 201	CONTOUR LINE	200 201
	CULVERT/STORMDRAIN	
	UTILITY POLE	
UGU	UNDERGROUND UTILITIES	UGU
OHU	OVERHEAD UTILITIES	OHU
	TRANSFORMER PAD	T
	RIPRAP	
	SILT FENCE	SF

STATE OF MAINE
DUSTIN M. ROMA
No. 12121
PROFESSIONAL ENGINEER
2-11-19

DM ROMA
CONSULTING ENGINEERS
P.O. BOX 1116
WINDHAM, ME 04062
(207) 310 - 0506

REV	DATE	BY	DESCRIPTION
A	1-7-19	DMR	ISSUED FOR PERMITTING
B	2-11-19	DMR	REVISED PER TOWN REVIEW

ROADWAY PLAN & PROFILE

WINDLEIGH RIDGE SUBDIVISION
WINDHAM, MAINE

FOR RECORD OWNER:
DAIGLE FINANCIAL & DEVELOPMENT, LLC
85 NASH ROAD
WINDHAM, ME 04062

18029
JOB NUMBER:

AS SHOWN
SCALE:

2-11-2019
DATE:

SHEET 4 OF 5

PP-1

EROSION AND SEDIMENTATION CONTROL NOTES:

IN ORDER TO EFFECTIVELY PREVENT AND CONTROL EROSION RELATED TO SOIL DISTURBANCE, THE FOLLOWING BEST MANAGEMENT PRACTICES (BMPS) SHALL BE EMPLOYED:

1. TEMPORARY SOIL STABILIZATION BMPS

TEMPORARY MULCHING SHALL BE APPLIED IMMEDIATELY TO ANY AREAS THAT HAVE BEEN TEMPORARILY OR PERMANENTLY SEEDED. ANY DISTURBED SOIL WITHIN 100' OF A STREAM, WATER BODY OR WETLAND MUST RECEIVE TEMPORARY MULCH WITHIN 7 DAYS FOLLOWING DISTURBANCE AND BEFORE ANY STORM EVENT. ALL OTHER AREAS SHALL RECEIVE TEMPORARY MULCH WITHIN 14 DAYS OF DISTURBANCE. AREAS WHICH CANNOT BE SEEDED DURING THE GROWING SEASON SHALL BE MULCHED FOR OVER-WINTER PROTECTION. THE FOLLOWING ARE ACCEPTABLE TEMPORARY MULCHING METHODS:

HAY OR STRAW MULCHES NEED TO BE AIR-DRIED, FREE OF UNDESIRABLE SEEDS AND COARSE MATERIALS. APPLICATION RATE MUST BE 2 BALES (70-90 POUNDS) PER 1000 SQ FT OR 1.5 TO 2 TONS (90-100 BALES) PER ACRE TO COVER 75-90% OF THE GROUND SURFACE. HAY OR STRAW CAN BE DRIVEN INTO THE GROUND WITH TRACKED EQUIPMENT IF SLOPES ARE LESS THAN 3%, OR CAN BE ANCHORED WITH JUTE, WOOD FIBER OR PLASTIC NETTING ON STEEPER SLOPES.

EROSION CONTROL MIX MUST CONSIST PRIMARILY OF ORGANIC MATERIAL AND WILL INCLUDE ANY OF THE FOLLOWING: SHREDDED BARK, STUMP GRINDINGS, COMPOSTED BARK OR OTHER ACCEPTABLE PRODUCTS BASED ON A SIMILAR RAW SOURCE. WOOD OR BARK CHIPS, GROUND CONSTRUCTION DEBRIS OR REPROCESSED WOOD PRODUCTS ARE NOT ACCEPTABLE. EROSION CONTROL MIX CAN BE USED AS A STAND-ALONE REINFORCEMENT ON SLOPES OF 2 HORIZONTAL TO 1 VERTICAL OR LESS AND DRAINING IN SHEET FLOW. IT CAN BE PLACED WITH A HYDRAULIC BUCKET, WITH A PNEUMATIC BLOWER OR BY HAND, AND MUST PROVIDE 100% SOIL COVERAGE.

EROSION CONTROL MIX SHALL MEET THE FOLLOWING SPECIFICATIONS:
-ORGANIC MATTER CONTENT SHALL BE BETWEEN 80-100%, DRY WEIGHT BASIS.
-PARTICLE SIZE BY WEIGHT SHALL BE 100% PASSING A 6 IN. SCREEN AND BETWEEN 70-85% PASSING 0.75 IN. SCREEN
-ORGANIC PORTION NEEDS TO BE FIBROUS AND ELONGATED
-LARGE PORTIONS OF SILTS, CLAYS OR FINE SANDS ARE NOT ACCEPTABLE IN THE MIX

WHEN USED AS MULCH, THE THICKNESS OF THE ERISION CONTROL MIX IS BASED UPON THE FOLLOWING:

LENGTH OF SLOPE	3:1 SLOPE OR LESS	BETWEEN 2:1 AND 3:1 SLOPE
LESS THAN 20 FT	2.0 IN.	4.0 IN.
BETWEEN 20 - 60 FT	3.0 IN.	5.0 IN.
BETWEEN 60 - 100 FT	4.0 IN.	6.0 IN.

CHEMICAL MULCHES AND SOIL BINDERS MAY BE USED AS DIRECTED BY THE ENGINEER. THE CONTRACTOR SHALL CONSULT WITH THE MANUFACTURER TO DETERMINE ADEQUATE APPLICATION RATES AND METHODS.

EROSION CONTROL BLANKETS AND MATS SHALL BE USED ON STEEP SLOPES AND IN THE BOTTOM OF GRASSED WATERWAYS, OR AS OTHERWISE DIRECTED BY THE ENGINEER. THE MAT SHALL BE INSTALLED WITH FIRM CONTINUOUS CONTACT WITH THE SOIL AND STAPLED ACCORDING TO THE MANUFACTURER'S RECOMMENDATIONS.

TEMPORARY MULCH SHALL BE INSPECTED FOLLOWING ANY SIGNIFICANT RAINFALL EVENT. IF LESS THAN 90% OF THE SOIL SURFACE IS COVERED BY MULCH, ADDITIONAL MULCH SHALL BE IMMEDIATELY APPLIED. ERISION CONTROL MATS AND MULCH ANCHORING MUST BE INSPECTED AFTER RAINFALL EVENTS FOR DISLOCATION OR FAILURE, AND REPAIRED IMMEDIATELY. INSPECTIONS SHALL TAKE PLACE UNTIL 95% OF THE SOIL SURFACE IS COVERED WITH PERMANENT VEGETATION. WHERE MULCH IS USED WITH ORNAMENTAL PLANTINGS, INSPECT PERIODICALLY THROUGHOUT THE YEAR TO DETERMINE IF MULCH IS MAINTAINING COVERAGE OF THE SOIL SURFACE, AND REPAIR AS NEEDED.

TEMPORARY VEGETATION SHALL BE ESTABLISHED ON SOILS THAT WILL NOT BE BROUGHT TO FINAL GRADE FOR A PERIOD OF MORE THAN 30 DAYS. IF TEMPORARY VEGETATION CANNOT BE ESTABLISHED PRIOR TO OCTOBER 15, TEMPORARY MULCH SHALL BE APPLIED THROUGH THE WINTER AND TEMPORARY VEGETATION SHALL BE PLANTED AT THE BEGINNING OF THE GROWING SEASON THE FOLLOWING YEAR. TO PREPARE THE SEEDBED, THE CONTRACTOR SHALL APPLY FERTILIZER AT A RATE OF 600 POUNDS PER ACRE OF 10-10-10 (N-P205-K20) OR EQUIVALENT AND LIMESTONE AT A RATE OF 3 TONS PER ACRE, IF NECESSARY. LOOSEN SOIL TO A DEPTH OF 2 INCHES IN AREAS THAT HAVE BEEN COMPACTED BY CONSTRUCTION ACTIVITIES. GRASS SEED SHALL BE SELECTED BASED UPON THE TIME OF YEAR THE PLANTING WILL TAKE PLACE AS SUMMARIZED IN THE FOLLOWING TABLE:

SEED	LB. PER ACRE	RECOMMENDED SEEDING DATES
WINTER RYE	112	8/15 - 10/1
OATS	80	4/1 - 7/1 8/15 - 9/15
ANNUAL RYEGRASS	40	4/1 - 7/1

TEMPORARY SEEDING SHALL BE PERIODICALLY INSPECTED TO MAINTAIN AT LEAST 95% VEGETATIVE COVER OF SOIL SURFACE. IF ANY EVIDENCE OF EROSION OR SEDIMENTATION IS APPARENT, REPAIRS SHALL BE MADE AND OTHER TEMPORARY MEASURES SHALL BE USED IN THE INTERIM SUCH AS TEMPORARY MULCH, FILTER BARRIERS, ETC.

2. SEDIMENT BARRIER BMPS

TEMPORARY SEDIMENT BARRIERS ARE INSTALLED ACROSS OR ALONG THE TOE OF A SLOPE AND INCLUDE ANY OF THE FOLLOWING:

FILTER BARRIER FENCE, ALSO CALLED SILT FENCE, SHALL BE INSTALLED WHERE SHOWN ON THE PLANS AND IN ACCORDANCE WITH MANUFACTURERS RECOMMENDATIONS. THE FILTER FABRIC SHALL BE A PERVIOUS SHEET OF PROPYLENE, NYLON, POLYESTER OR ETHYLENE YARN AND SHALL PROVIDE A MINIMUM OF 6 MONTHS USABLE CONSTRUCTION LIFE INCLUDING PROTECTION AGAINST ULTRA-VIOLET LIGHT. THE HEIGHT OF THE FENCE SHALL NOT EXCEED 36 INCHES INSTALLED AND POST SPACING SHALL NOT EXCEED 6 FEET. JOINTS IN THE FENCE SHALL BE AVOIDED TO THE EXTENT POSSIBLE, AND IF NECESSARY SHALL BE SPLICED TOGETHER AT A SUPPORT POST WITH A MINIMUM 6 INCH OVERLAP. A TRENCH SHALL BE EXCAVATED APPROXIMATELY 4 INCHES WIDE AND 4 INCHES DEEP, AND THE BOTTOM 6-8 INCHES OF FABRIC SHALL BE "TOED-IN" TO THE TRENCH AND COMPACTED. THE TRENCH SHOULD BE UPHILL OF THE FABRIC PRIOR TO BURIAL.

STRAY/HAY BALES SHALL BE INSTALLED WHERE SPECIFIED ON THE PLANS IN A SINGLE ROW WITH THE ENDS OF ADJACENT BALES TIGHTLY ABUTTING ONE ANOTHER. ALL BALES SHALL BE EITHER WIRE-BOUND OR STRING-TIED. THE BARRIER SHALL BE ENTRENCHED AND BACKFILLED TO A DEPTY OF AT LEAST 4 INCHES, AND THE BALES SHALL BE SECURED WITH AT LEAST TWO WOODEN STAKES OR STEEL REBAR PER BALE. STAKES SHALL BE DRIVEN IN A DIRECTION TO PUSH THE BALES TOGETHER. GAPS BETWEEN BALES SHALL BE CHINKED WITH HAY.

EROSION CONTROL MIX BERMS ARE LINEAR BARRIERS COMPOSED OF EROSION CONTROL MIX AS SPECIFIED ABOVE. THE BERM MUST BE A MINIMUM OF 12 INCHES TALL AND 24 INCHES WIDE AT THE BASE IF UPHILL SLOPES ARE LESS THAN 5%. STEEPER SLOPES OR SLOPES GREATER THAN 20 FEET LONG MAY REQUIRE A LARGER WIDTH BERM. EROSION CONTROL MIX BERMS AT THE BASE OF A LONG OR STEEP SLOPE MAY ALSO REQUIRE A FILTER FENCE TO BE INSTALLED ON THE DOWNHILL SIDE OF THE BERM TO PROVIDE ADDITIONAL STABILIZATION AGAINST HIGH RUNOFF FLOWS.

CONTINUOUS CONTAINED BERMS, WHICH ARE ALSO REFERRED TO AS A FILTER SOCK, PROVIDES ADDITIONAL STABILITY TO AN EROSION CONTROL MIX BERM AND SHOULD BE USED IN FROZEN GROUND CONDITIONS OR IN AREAS THAT RECEIVE CONCENTRATED FLOW.

SEDIMENT BARRIERS SHALL BE INSPECTED AFTER ANY SIGNIFICANT RAINFALL EVENT AND REPAIRED IMMEDIATELY IF THERE ARE ANY SIGNS OF EROSION OR SEDIMENTATION BELOW THE BARRIERS. IF THERE ARE SIGNS OF UNDERCUTTING AT THE CENTER OR EDGES OF THE BARRIER, OR IF LARGE VOLUMES OF WATER ARE IMPOUNDED BEHIND THE BARRIER, IT MAY BE NECESSARY TO REPLACE THE BARRIER WITH A TEMPORARY STONE CHECK DAM. SEDIMENT SHALL BE REMOVED ONCE IT REACHES HALF THE BARRIER HEIGHT. AFTER THE BARRIER IS REMOVED, ANY REMAINING SILT SHALL EITHER BE REMOVED OR GRADED TO CONFORM WITH THE EXISTING TOPOGRAPHY AND VEGETATED.

3. TEMPORARY CHECK DAMS

STONE CHECK DAMS SHALL BE INSTALLED IN SWALES OR DRAINAGE DITCHES TO REDUCE STORMWATER VELOCITIES AS SHOWN ON THE PLANS. STONE CHECK DAMS ARE NOT EFFECTIVE IN REMOVING SEDIMENT AND SHOULD BE USED IN CONJUNCTION WITH SEDIMENT BARRIERS IDENTIFIED ABOVE. TEMPORARY CHECK DAMS MAY BE LEFT IN PLACE PERMANENTLY IN MOST CASES. CHECK DAMS SHOULD BE NO HIGHER THAN 24 INCHES, AND THE CENTER OF THE CHECK DAM MUST BE AT LEAST 6 INCHES LOWER THAN THE OUTSIDE EDGES. CHECK DAMS SHOULD BE SPACED SUCH THAT THE CREST OF THE DOWNSTREAM CHECK DAM IS AT THE SAME ELEVATION AS THE TOE OF THE UPSTREAM CHECK DAM. CHECK DAMS IN A DRAINAGE DITCH OR WATERWAY SHOULD BE INSTALLED PRIOR TO DIRECTING RUNOFF TO THEM.

4. STORM DRAIN INLET PROTECTION

STORM DRAIN INLETS THAT ARE MADE OPERATIONAL BEFORE THEIR DRAINAGE AREA IS STABILIZED SHALL BE PROTECTED WITH A FILTER UNTIL THE DRAINAGE AREA IS EITHER PAVED OR STABILIZED WITH 95% VEGETATIVE GROWTH. THE FOLLOWING ARE ACCEPTABLE BMPS ASSOCIATED WITH STORM DRAIN INLET PROTECTION:

HAY BALE OR SILT FENCE INLET STRUCTURE CONSISTS OF HAY BALES OR SILT FENCE CONFIGURED AROUND A CATCH BASIN INLET FRAME AND INSTALLED ACCORDING TO THE METHODS OUTLINED ABOVE. THIS METHOD IS SUITABLE FOR OPEN PIPE (CULVERT) INLETS, FIELD INLETS OR ROAD INLETS THAT HAVE NOT YET BEEN PAVED.

MANUFACTURED SEDIMENT FILTERS ARE THE PREFERRED METHOD FOR PROTECTING CATCH BASIN INLETS IN PAVED OR GRAVEL ROADWAYS. THE FILTERS TYPICALLY CONSIST OF A FABRIC OR OTHER PERVIOUS MATERIAL THAT IS PLACED ABOVE OR BELOW THE GRATE THAT TRAPS SEDIMENT ON THE SURFACE AND ALLOWS WATER TO FLOW THROUGH THE GRATE. CONSIDERATIONS SUCH AS WEATHER CONDITIONS, SLOPES, TRIBUTARY WATERSHED AREA AND EXPECTED SEDIMENT ACCUMULATION SHOULD BE FACTORED INTO MAKING A DECISION ON ANY PARTICULAR PRODUCT, AND THE MANUFACTURER'S RECOMMENDATIONS ON INSTALLATION AND MAINTENANCE SHALL BE STRICTLY ADHERED TO.

5. STABILIZED CONSTRUCTION EXIT

TO REDUCE THE TRACKING OF SEDIMENT ONTO ROADWAYS, A STABILIZED CONSTRUCTION EXIT SHALL BE INSTALLED AT ALL POINTS OF EGRESS WHERE VEHICLES MAY TRAVEL FROM THE PROJECT SITE TO A PUBLIC ROAD OR OTHER PAVED AREA. THE STONE PAD SHALL CONSIST OF A MINIMUM 6-INCH DEPTH OF 2-3 INCH CRUSHED STONE, AND SHALL BE PLACED ON A GEOTEXTILE FABRIC. THE PAD SHALL EXTEND AT LEAST 50 FEET INTO THE PROJECT SITE AND BE A MINIMUM OF 10 FEET WIDE. THE EXIT SHALL BE MAINTAINED IN A CONDITION THAT WILL PREVENT TRACKING OF SEDIMENT ONTO PUBLIC RIGHTS-OF-WAY, AND THE CONTRACTOR SHALL SWEEP OR WASH PAVEMENT AT EXITS THAT HAVE EXPERIENCED ANY MUD-TRACKING.

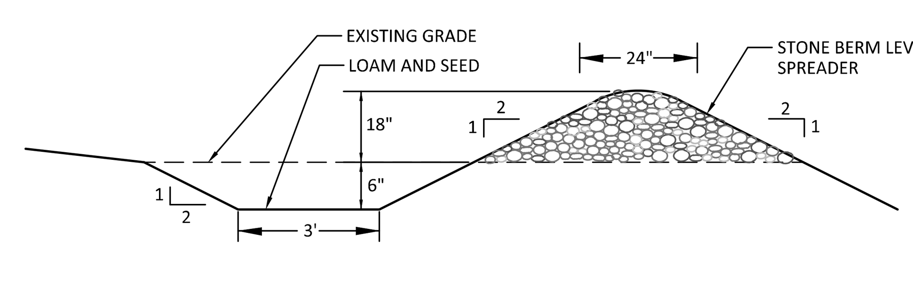

STORMWATER LEVEL LIP SPREADER

NOT TO SCALE

GENERAL NOTES:

1. THE STONE USED TO CONSTRUCT THE BERM SHALL MEET THE FOLLOWING SPECIFICATIONS:

SIEVE DESIGNATION (US)	PERCENT PASSING BY WEIGHT
12 IN.	100
6 IN.	84-100
3 IN.	68-83
1 IN.	42-55
NO. 4	8-12

6. DUST CONTROL

THE CONTRACTOR IS RESPONSIBLE FOR CONTROLLING DUST ON THE PROJECT SITE AND ON ADJACENT ROADWAYS. EXPOSED SOIL SURFACES SHALL BE MOISTENED PERIODICALLY WITH ADEQUATE WATER TO CONTROL DUST. GRAVEL SURFACES SHALL EITHER BE TREATED WITH AN APPLICATION OF CALCIUM CHLORIDE OR COVERED WITH CRUSHED STONE IF DUST CONTROL BECOMES DIFFICULT WITH NORMAL WATER APPLICATIONS.

7. LAND GRADING AND SLOPE PREPARATION

GRADING SHALL BE PLANNED SO AS TO MINIMIZE THE LENGTH OF TIME BETWEEN INITIAL SOIL EXPOSURE AND FINAL GRADING. ON LARGE PROJECTS THIS SHOULD BE ACCOMPLISHED BY PHASING THE OPERATION AND COMPLETING THE FIRST PHASE UP TO FINAL GRADING AND SEEDING BEFORE STARTING THE NEXT PHASE. ANY EXPOSED AREA THAT WILL NOT BE FINISH GRADED WITHIN 14 DAYS SHALL BE TREATED WITH MULCH OR PLANTED WITH TEMPORARY VEGETATION. PROVISIONS SHALL BE MADE TO SAFELY CONVEY SURFACE RUNOFF TO STORM DRAINS, PROTECTED OUTLETS OR TO STABLE WATER COURSES TO ENSURE THAT SURFACE RUNOFF WILL NOT DAMAGE SLOPES OR OTHER GRADED AREAS. CUT AND FILL SLOPES THAT ARE TO BE STABILIZED WITH GRASS SHALL NOT BE STEEPER THAN 2:1. AREAS TO BE FILLED SHALL BE CLEARED, GRUBBED AND STRIPPED OF TOPSOIL TO REMOVE TREES, VEGETATION, ROOTS OR OTHER OBJECTIONABLE MATERIALS. AREAS SHALL BE SCARIFIED TO A MINIMUM DEPTH OF 3 INCHES PRIOR TO PLACEMENT OF TOPSOIL. ALL FILLS SHALL BE COMPACTED AS REQUIRED TO REDUCE EROSION, SLIPPAGE, SETTLEMENT, SUBSIDENCE OR OTHER RELATED PROBLEMS. FILL INTENDED TO SUPPORT BUILDINGS, STRUCTURES AND CONDUITS, ETC. SHALL BE COMPACTED IN ACCORDANCE WITH LOCAL REQUIREMENTS OR CODES. ALL FILLS SHALL BE PLACED AND COMPACTED IN LAYERS NOT TO EXCEED 8 INCHES IN THICKNESS. FILL MATERIAL SHALL BE FREE OF STUMPS, BUILDING DEBRIS AND OTHER OBJECTIONABLE MATERIALS THAT WOULD INTERFERE WITH OR PREVENT CONSTRUCTION OF SATISFACTORY LIFTS. FROZEN MATERIAL OR SOFT, MUCKY OR HIGHLY COMPRESSIBLE MATERIALS SHALL NOT BE INCORPORATED INTO FILL SLOPES OR STRUCTURAL FILLS. FILL SHALL NOT BE PLACED ON A FROZEN FOUNDATION. SEEPS OR SPRINGS ENCOUNTERED DURING CONSTRUCTION SHALL BE HANDLED APPROPRIATELY. ALL GRADED AREAS SHALL BE PERMANENTLY STABILIZED IMMEDIATELY FOLLOWING FINISHED GRADING.

8. TOPSOIL

IF POSSIBLE, TOPSOIL SHALL BE STOCKPILED ON THE PROJECT SITE AND REUSED. HIGH QUALITY TOPSOIL SHALL BE FRIABLE AND LOAMY (LOAM, SANDY LOAM, SILT LOAM, SANDY CLAY LOAM, CLAY LOAM), AND SHALL BE FREE OF DEBRIS, TRASH, STUMPS, ROCKS, ROOTS AND NOXIOUS WEEKS. AFTER THE AREAS TO BE TOPSOILED HAVE BEEN BROUGHT TO GRADE, AND IMMEDIATELY PRIOR TO SPREADING THE TOPSOIL, THE SUBGRADE SHALL BE LOOSENED BY SCARIFYING TO A DEPTH OF AT LEAST 2 INCHES TO ENSURE BONDING WITH SUBSOIL. THE TOPSOIL SHALL BE UNIFORMLY DISTRIBUTED TO A MINIMUM COMPACTED DEPTH OF 4 INCHES. ANY IRREGULARITIES IN THE SURFACE RESULTING FROM TOPSOILING OR OTHER OPERATIONS SHALL BE CORRECTED IN ORDER TO PREVENT THE FORMATION OF DEPRESSIONS OR WATER POCKETS. IT IS NECESSARY TO COMPACT THE TOPSOIL ENOUGH TO ENSURE GOOD CONTACT WITH THE UNDERLYING SOIL, BUT UNDUE COMPACTION IS TO BE AVOIDED.

9. PERMANENT VEGETATION

TO PREPARE THE SEEDBED, APPLY 10-20-20 FERTILIZER AT A RATE OF 800 POUNDS PER ACRE AND GROUND LIMESTONE AT A RATE OF 3 TONS PER ACRE. WORK THE FERTILIZER AND LIMESTONE INTO THE TOPSOIL TO A DEPTH OF 4 INCHES AND REMOVE ANY STONES, ROOTS OR OTHER VISIBLE DEBRIS. SELECT A SEED MIXTURE THAT IS APPROPRIATE FOR THE SOIL TYPE AND MOISTURE CONTENT AS FOUND AT THE SITE, AND FOR THE AMOUNT OF SUN EXPOSURE AND FOR LEVEL OF USE. REFER TO THE USDA SOIL CONSERVATION SERVICE OR THE LOCAL SOIL AND WATER CONSERVATION DISTRICT FOR APPROPRIATE SEED MIXTURES. APPLY SEED UNIFORMLY IN ACCORDANCE WITH SUPPLIER RECOMMENDATIONS AND IMMEDIATELY COVER WITH MULCH AS DESCRIBED IN THE TEMPORARY MULCHING SECTION OF THIS PLAN.

HYDROSEEDING SHALL BE DONE IN ACCORDANCE WITH SUPPLIERS RECOMMENDATIONS.

SOD STRIPS SHALL BE LAID AT RIGHT ANGLES TO DIRECTION OF SLOPE OR FLOW OF WATER STARTING AT LOWEST ELEVATION. JOINTS SHALL BE STAGGERED, AND ALL STRIPS SHALL BE ROLLED OR TAMPED INTO PLACE. ON SLOPES, SOD SHALL BE ANCHORED WITH STAPLES, WIRE OR PINS. IRRIGATE SODDED AREA IMMEDIATELY AFTER INSTALLATION.

10. PERMANENT MULCHING

PERMANENT MULCH IS A LONG TERM COVER THAT PROVIDES A GOOD BUFFER AROUND DISTURBED AREAS. THE EROSION CONTROL MIX SHALL CONSIST PRIMARILY OF ORGANIC MATERIAL AND MAY INCLUDE SHREDDED BARK, STUMP GRINDINGS OR COMPOSTED BARK. WOOD CHIPS, GROUND CONSTRUCTION DEBRIS, REPROCESSED WOOD PRODUCTS OR BARK CHIPS ARE NOT ACCEPTABLE. THE EROSION CONTROL MIX SHALL CONTAIN A WELL-GRADED MIXTURE OF PARTICLE SIZES AND MAY CONTAIN ROCKS LESS THAN 4 INCHES IN DIAMETER. EROSION CONTROL MIX MUST BE FREE OF REFUSE, PHYSICAL CONTAINMANTS AND MATERIAL TOXIC TO PLANT GROWTH.

11. RIPRAP SLOPE STABILIZATION

RIPRAP STONE SHALL CONSIST OF SUB-ANGULAR FIELD STONE OR ROUGH UNHEWN QUARRY STONE OF APPROXIMATELY RECTANGULAR SHAPE. THE DEPTH OF STONE SHALL BE A MINIMUM OF 2.2 TIMES THE MAXIMUM STONE DIAMETER. A GRAVEL OR GEOTEXTILE FILTER BLANKET SHALL BE PLACED BETWEEN THE RIPRAP AND UNDERLYING SOIL SURFACE. GRAVEL FILTER BLANKETS SHALL MEET MDOT TYPE-C UNDERDRAIN MATERIAL SPECIFICATIONS AND BE AT LEAST 6 INCHES THICK. GEOTEXTILE FILTER BLANKETS SHALL BE SPECIFIED BASED ON SITE CONDITIONS. RIPRAP SLOPES SHALL BE TOED INTO THE BASE OF THE EMBANKMENT BY EXCAVATING A TRENCH AT THE BOTTOM OF THE SLOPE AND INSTALLING A STABLE BASE OF RIPRAP TO GRADE.

WINTER EROSION AND SEDIMENTATION CONTROL NOTES:

THE WINTER CONSTRUCTION PERIOD TYPICALLY BEGINS IN EARLY NOVEMBER AND ENDS IN MID APRIL. IF A CONSTRUCTION SITE IS NOT STABILIZED WITH PAVEMENT, A ROAD GRAVEL BASE, 75% MATURE VEGETATION COVER OR RIPRAP BY NOVEMBER 15 THEN THE SITE NEEDS TO BE PROTECTED WITH OVER-WINTER STABILIZATION. WINTER EXCAVATION AND EARTHWORK SHALL BE COMPLETED SUCH THAT NO MORE THAN 1 ACRE OF THE SITE IS WITHOUT STABILIZATION AT ANY ONE TIME. LIMIT THE EXPOSED AREA TO THOSE AREAS IN WHICH WORK IS TO OCCUR DURING THE FOLLOWING 15 DAYS AND THAT CAN BE MULCHED IN ONE DAY PRIOR TO ANY SNOW EVENT. AN AREA SHALL BE CONSIDERED DENUDED UNTIL THE SUBBASE GRAVEL IS INSTALLED IN THE ROADWAY AREAS OR THE AREAS OF FUTURE LOAM AND SEED HAVE BEEN LOAMED, SEEDED AND MULCHED. A COVER OF EROSION CONTROL MIX IS THE PREFERRED TEMPORARY MULCH DURING WINTER CONDITIONS.

1. NATURAL RESOURCE PROTECTION

ANY AREAS WITHIN 100 FEET FROM ANY REGULATED NATURAL RESOURCES, IF NOT STABILIZED WITH A MINIMUM OF 75% MATURE VEGETATION CATCH, SHALL BE MULCHED BY DECEMBER 1 AND ANCHORED WITH PLASTIC NETTING OR PROTECTED WITH AN EROSION CONTROL COVER. DURING WINTER CONSTRUCTION, A DOUBLE ROW OF SEDIMENT BARRIERS (FOR EXAMPLE, SILT FENCE BACKED WITH HAY BALES OR EROSION CONTROL MIX) WILL BE PLACED BETWEEN ANY REGULATED NATURAL RESOURCE AND THE DISTURBED AREA. PROJECTS CROSSING THE REGULATED NATURAL RESOURCE SHALL BE PROTECTED A MINIMUM DISTANCE OF 100 FEET ON EITHER SIDE FROM THE RESOURCE. EXISTING PROJECTS NOT STABILIZED BY DECEMBER 1 SHALL BE PROTECTED WITH THE SECOND LINE OF SEDIMENT BARRIER TO ENSURE FUNCTIONALITY DURING THE SPRING THAW AND RAINS.

2. SEDIMENT BARRIERS

DURING FROZEN CONDITIONS, SEDIMENT BARRIERS MAY CONSIST OF EROSION CONTROL MIX BERMS OR ANY OTHER RECOGNIZED SEDIMENT BARRIERS AS FROZEN SOIL PREVENTS THE PROPER INSTALLATION OF HAY BALES OR SILT FENCES.

3. MULCHING

ALL AREAS SHALL BE CONSIDERED TO BE DENUDED UNTIL SEEDED AND MULCHED. HAY AND STRAY MULCH SHALL BE APPLIED AT A RATE OF 3 TONS PER ACRE (TWICE THE NORMAL ACCEPTED RATE) AND SHALL BE PROPERLY ANCHORED. EROSION CONTROL MIX MUST BE APPLIED WITH A MINIMUM 4 INCHES THICKNESS. MULCH SHALL NOT BE SPREAD ON TOP OF SNOW. SNOW MUST BE REMOVED DOWN TO A ONE-INCH DEPTH PRIOR TO APPLICATION. AFTER EACH DAY OF FINAL GRADING, THE AREA WILL BE PROPERTY STABILIZED WITH ANCHORED HAY OR STRAW OR EROSION CONTROL MATTING. AN AREA SHALL BE CONSIDERED TO HAVE BEEN STABILIZED WHEN EXPOSED SURFACES HAVE BEEN EITHER MULCHED OR ADEQUATELY ANCHORED SO THAT GROUND SURFACE IS NOT VISIBLE THROUGH THE MULCH. BETWEEN THE DATES OF NOVEMBER 1 AND APRIL 15, ALL MULCH SHALL BE ANCHORED BY EITHER MULCH NETTING, ASPHALT EMULSION CHEMICAL, TRACKING OR WOOD CELLULOSE FIBER. THE COVER WILL BE CONSIDERED SUFFICIENT WITH THE GROUND SURFACE IS NOT VISIBLE THROUGH THE MULCH. AFTER NOVEMBER 1ST, MULCH AND ANCHORING OF ALL EXPOSED SOIL SHALL OCCUR AT THE END OF EACH FINAL GRADING WORKDAY.

4. SOIL STOCKPILING

STOCKPILES OF SOIL OR SUBSOIL WILL BE MULCHED FOR OVER WINTER PROTECTION WITH HAY OR STRAW AT TWICE THE NORMAL RAT EOR WITH A FOUR-INCH LAYER OF EROSION CONTROL MIX. THIS WILL BE DONE WITHIN 24 HOURS OF STACKING AND RE-ESTABLISHED PRIOR TO ANY RAINFALL OR SNOWFALL. ANY SOIL STOCKPILE WILL NOT BE PLACED WITHIN 100 FEET FROM ANY REGULATED NATURAL RESOURCE.

5. SEEDING

BETWEEN THE DATES OF OCTOBER 15 AND APRIL 1, LOAM OR SEED WILL NOT BE REQUIRED. DURING PERIODS OF ABOVE FREEZING TEMPERATURES FINISHED AREAS SHALL BE FINE GRADED AND EITHER PROTECTED MULCH OR TEMPORARILY SEEDED AND MULCHED UNTIL SUCH TIME AS THE FINAL TREATMENT CAN BE APPLIED. IF THE DATE IS AFTER NOVEMBER 1 AND IF THE EXPOSED AREA HAS BEEN LOOMED, FINAL GRADED WITH A UNIFORM SURFACE, THEN THE AREA MAY BE DORMANT SEEDED AT A RATE OF 3 TIMES HIGHER THAN SPECIFIED FOR PERMANENT SEED AND THEN MULCHED. IF DORMANT SEEDING IS USED, ALL DISTURBED AREAS SHALL RECEIVE 4 INCHES OF LOAM AND SEED AT AN APPLICATION RATE OF 5 LBS PER 1,000 S.F. ALL AREAS INSUFFICIENTLY VEGETATED (LESS THAN 75%) IN THE SPRING SHALL BE REVEGETATED.

6. OVER-WINTER STABILIZATION OF DITCHES AND CHANNELS

ALL STONE-LINED DITCHES AND CHANNELS MUST BE CONSTRUCTED BY NOVEMBER 15. ALL GRASS-LINED DITCHES AND CHANNELS MUST BE CONSTRUCTED AND STABILIZED BY SEPTEMBER 1. IF A GRASS-LINED DITCH OR CHANNEL IS STABILIZED BY SEPTEMBER 1, THEN EITHER A SOD LINING SHALL BE INSTALLED PRIOR TO OCTOBER 1 OR THE DITCH MUST BE LINED WITH STONE RIPRAP PRIOR TO NOVEMBER 15.

7. OVER-WINTER STABILIZATION OF DISTURBED SLOPES

ALL STONE-COVERED SLOPES MUST BE CONSTRUCTED AND STABILIZED BY NOVEMBER 15. ALL SLOPES TO BE VEGETATED MUST BE SEEDED AND MULCHED BY SEPTEMBER 1. ALL AREAS HAVING A GRADE STEEPER THAN 15% SHALL BE CONSIDERED A SLOPE. IF A SLOPE TO BE VEGETATED IS NOT STABILIZED BY SEPTEMBER 1, THEN THE SLOPE SHALL EITHER BE STABILIZED WITH TEMPORARY VEGETATION AND EROSION CONTROL MATS BY OCTOBER 1, SOD BY OCTOBER 1, EROSION CONTROL MIX BY NOVEMBER 15 OR STONE RIPRAP BY NOVEMBER 15. SEE APPLICABLE SECTIONS UNDER EROSION AND SEDIMENTATION CONTROL NOTES FOR PROPER INSTALLATION METHODS.

8. OVER-WINTER STABILIZATION OF DISTURBED SOILS

BY SEPTEMBER 15, ALL DISTURBED SOILS ON AREAS HAVING A SLOPE LESS THAN 15% MUST BE SEEDED AND MULCHED. IF THE DISTURBED AREAS ARE NOT STABILIZED BY THIS DATE, THEN THE AREA SHALL EITHER BE STABILIZED WITH TEMPORARY VEGETATION BY OCTOBER 1, SOD BY OCTOBER 1, OR MULCH BY NOVEMBER 15. SEE APPLICABLE SECTIONS UNDER EROSION AND SEDIMENTATION CONTROL NOTES FOR PROPER INSTALLATION METHODS.

9. MAINTENANCE

MAINTENANCE MEASURES SHALL BE APPLIED AS NEEDED DURING THE ENTIRE CONSTRUCTION SEASON. AFTER EACH RAINFALL, SNOW STORM OR PERIOD OF THAWING AND RUNOFF, THE SITE CONTRACTOR SHALL PERFORM A VISUAL INSPECTION OF ALL INSTALLED EROSION CONTROL MEASURES AND PERFORM REPAIRS AS NEEDED TO INSURE THEIR CONTINUOUS FUNCTION. FOLLOWING THE TEMPORARY AND/OR FINAL SEEDING AND MULCHING, THE CONTRACTOR SHALL, IN THE SPRING, INSPECT AND REPAIR ANY DAMAGES AND/OR BARE SPOTS. AN ESTABLISHED VEGETATIVE COVER MEANS A MINIMUM OF 85% OF AREAS VEGETATED WITH VIGOROUS GROWTH.

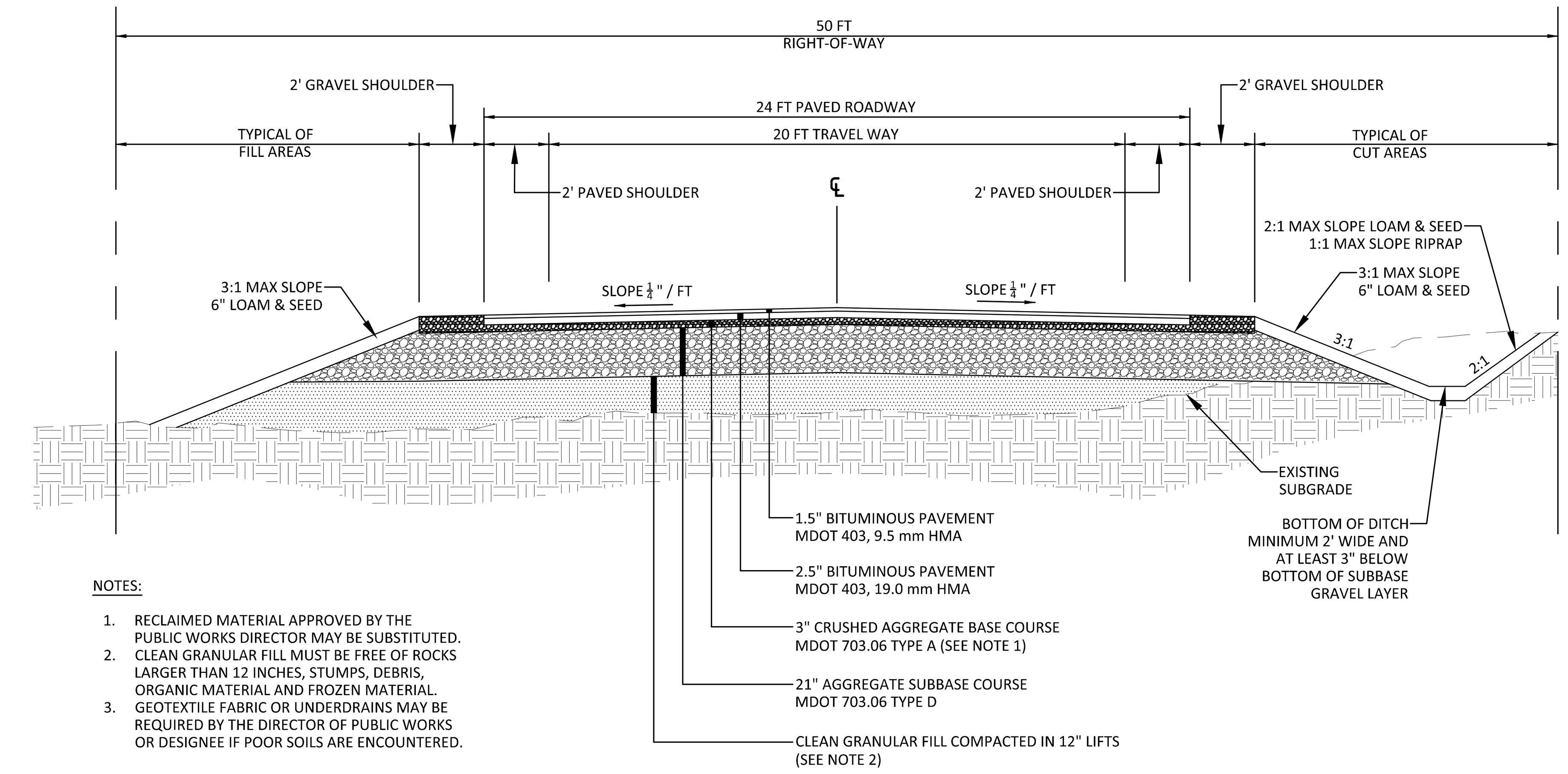

NOTES:

1. RECLAIMED MATERIAL APPROVED BY THE PUBLIC WORKS DIRECTOR MAY BE SUBSTITUTED.
2. CLEAN GRANULAR FILL MUST BE FREE OF ROCKS LARGER THAN 12 INCHES, STUMPS, DEBRIS, ORGANIC MATERIAL AND FROZEN MATERIAL.
3. GEOTEXTILE FABRIC OR UNDERDRAINS MAY BE REQUIRED BY THE DIRECTOR OF PUBLIC WORKS OR DESIGNEE IF POOR SOILS ARE ENCOUNTERED.

TYPICAL ROADWAY SECTION

NOT TO SCALE

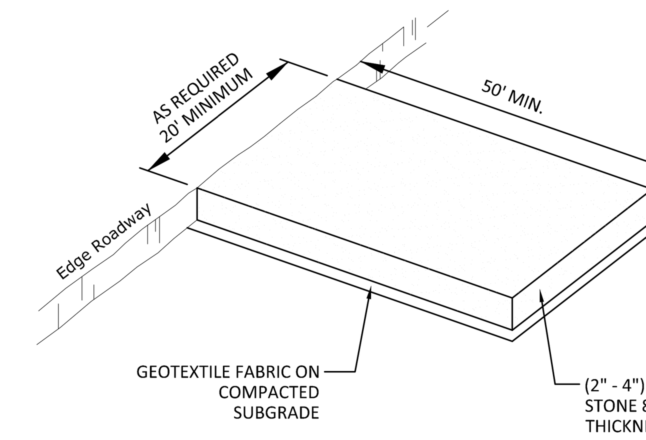

STABILIZED CONSTRUCTION ENTRANCE

NOT TO SCALE

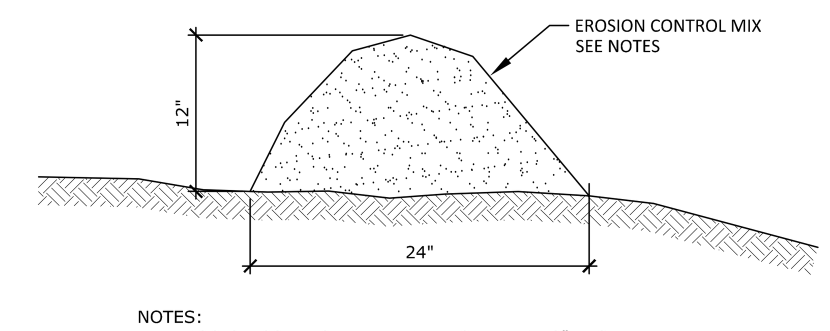

NOTES:
1. EROSION CONTROL MIX BERM INSTALLED 12" HIGH AND 24" WIDE CONSISTING OF STUMP GRINDINGS WITH NO ROCKS GREATER THAN 4" OR LARGE AMOUNTS OF FINES.

EROSION CONTROL MIX BERM

NOT TO SCALE

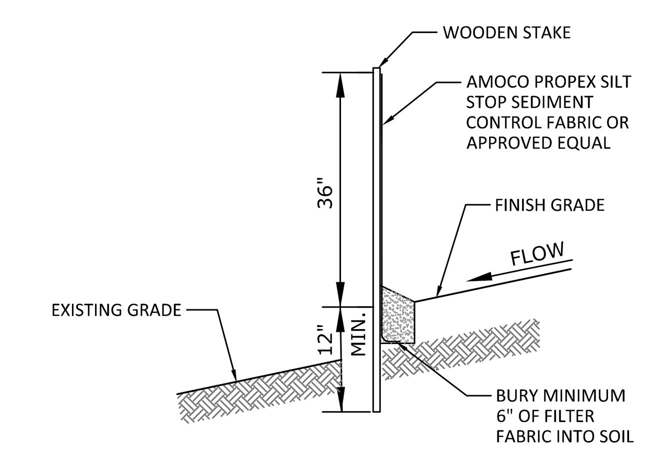

SEDIMENT FILTER FENCE

NOT TO SCALE

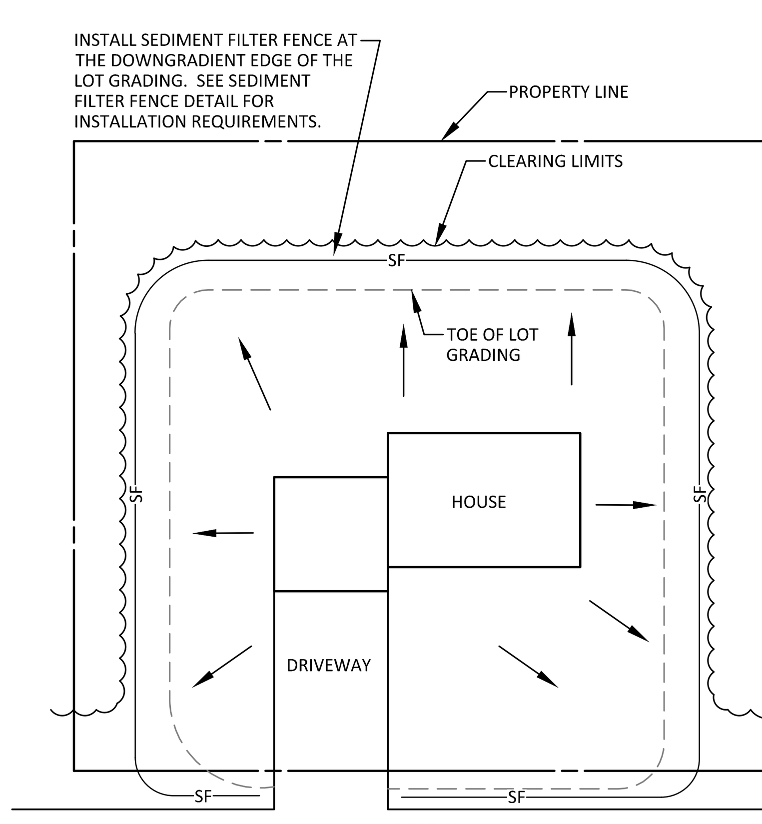

TYPICAL HOUSE LOT
EROSION CONTROL DETAIL

NOT TO SCALE

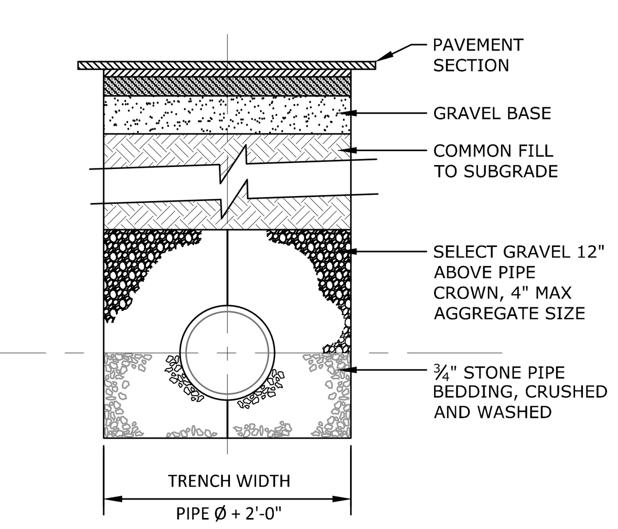

TYPICAL TRENCH SECTION

NOT TO SCALE

DM ROMA
CONSULTING ENGINEERS
P.O. BOX 1116
WINDHAM, ME 04062
(207) 310 - 0506

REV	DATE	BY	DESCRIPTION
A	1-7-19	DMR	ISSUED FOR PERMITTING
B	2-11-19	DMR	REVISED PER TOWN REVIEW

STATE OF MAINE DUSTIN M. ROMA No. 12131 LICENSED PROFESSIONAL ENGINEER 2-11-19

CONSTRUCTION DETAILS
WINDLEIGH RIDGE SUBDIVISION
WINDHAM, MAINE

FOR RECORD OWNER:
DAIGLE FINANCIAL & DEVELOPMENT, LLC
85 NASH ROAD
WINDHAM, ME 04062

18029
JOB NUMBER:

AS SHOWN
SCALE:

2-11-2019
DATE:

SHEET 5 OF 5

D-1