WOODSIDE CONDOMINIUM
RETIREMENT COMMUNITY

GRAY ROAD
WINDHAM, MAINE

CONSULTANTS

CIVIL ENGINEER	DM ROMA CONSULTING ENGINEERS
LAND SURVEYOR	SURVEY, INC.
SITE EVALUATOR	SUMMIT GEOENGINEERING SERVICES
WETLAND SCIENTIST	MARK HAMPTON ASSOCIATES, INC.
GEOLOGIST	SUMMIT GEOENGINEERING SERVICES

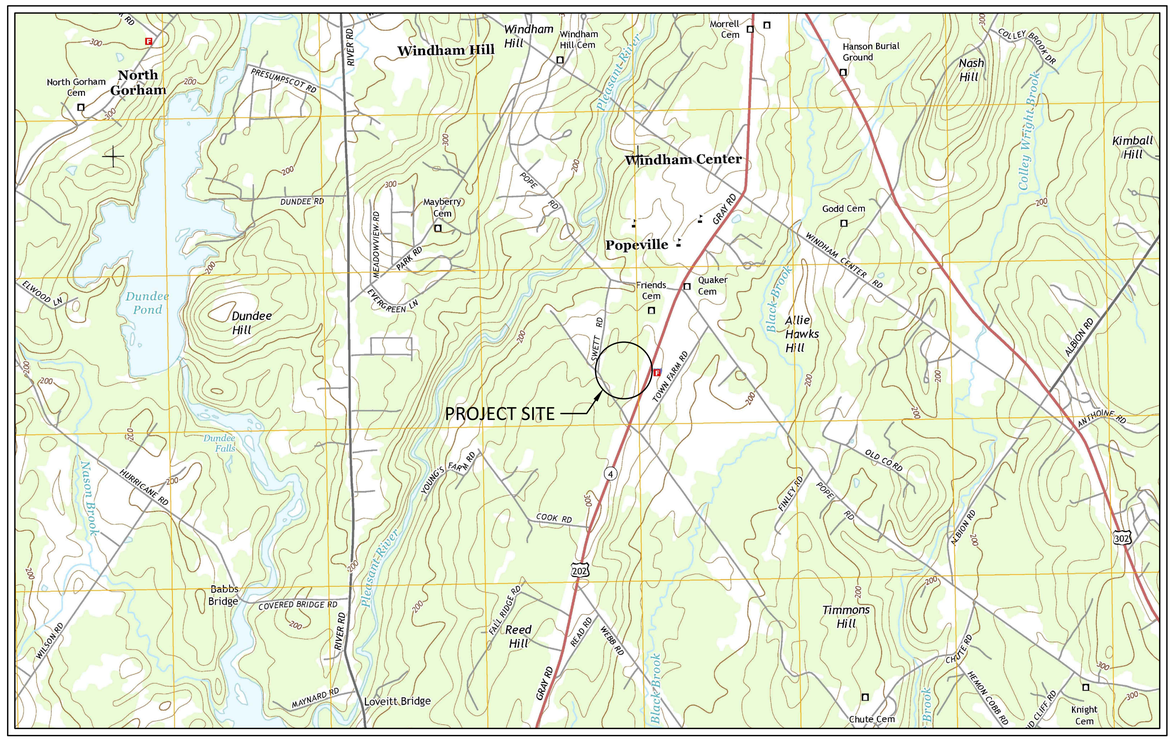

PROJECT VICINITY MAP

APPLICANT:

WELD, LLC
P.O. BOX 1361
WINDHAM, MAINE 04062

ISSUED FOR PRELIMINARY SUBDIVISION REVIEW - NOT FOR CONSTRUCTION

APRIL 22, 2019

PREPARED BY:

DM ROMA
CONSULTING ENGINEERS
P.O. BOX 1116
WINDHAM, ME 04062
(207) 310 - 0506

GRAY ROAD RETIREMENT COMMUNITY

DRAWING SHEET INDEX

PAGE NO.	DESCRIPTION
1	TITLE SHEET
2	BOUNDARY SURVEY
3	AMENDED SUBDIVISION PLAN
4	PLAN & PROFILE
5	GRADING & UTILITY PLAN
6	GRADING & UTILITY PLAN
7	GRADING & UTILITY PLAN
8	ROADWAY PROFILE
9	ROADWAY PROFILE
10	PLAN & PROFILE: SECONDARY ROAD CONNECTION
11	DETAILS
12	DETAILS
13	DETAILS
14	DETAILS

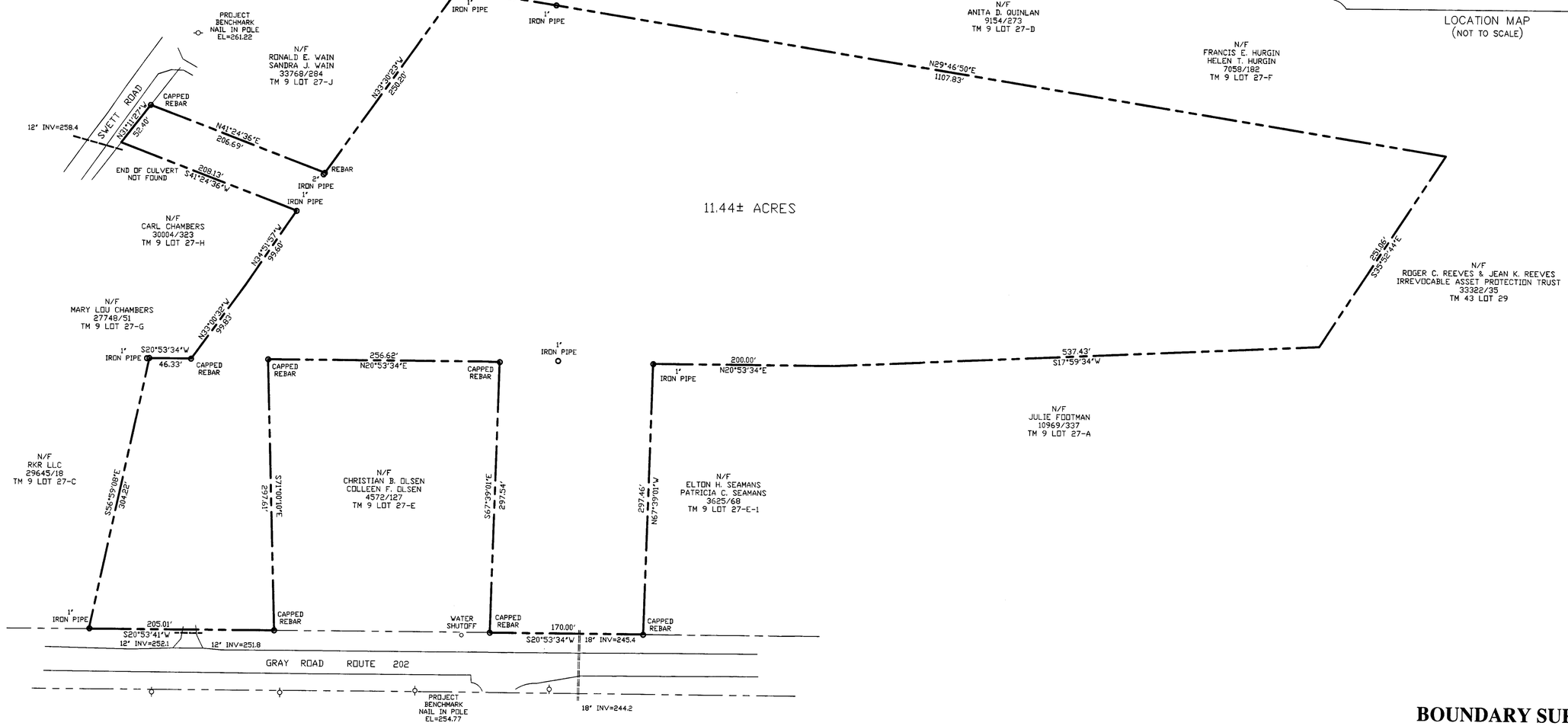

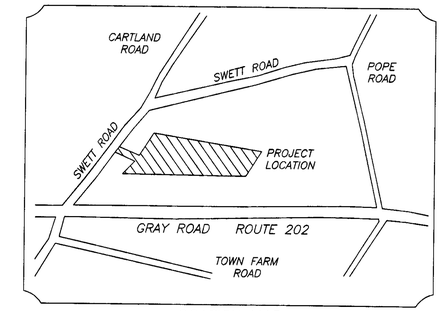

LOCATION MAP
(NOT TO SCALE)

PLAN REFERENCE:

(1) PLAN OF LAND ON SWETT ROAD IN WINDHAM, MAINE FOR LAURIE CHAMPAGNE DATED DECEMBER 2016 BY WAYNE T. WOOD & CO.

(2) PLAN SHOWING A STANDARD BOUNDARY SURVEY MADE FOR CHRISTIAN B. AND COLLEEN F. OLSEN 360 GRAY ROAD WINDHAM, MAINE DATED 08-02-05 BY DANIEL J. DALFONSO LLC.

60 0 30 60 120
GRAPHIC SCALE
1"=60'

SURVEY NOTES:

(1) THE RECORD OWNER OF THE PARCEL IS WELD, LLC AS DESCRIBED IN DEEDS RECORDED IN BOOK 33768 PAGE 286 AND BOOK34816 PAGE 291 IN THE CUMBERLAND COUNTY REGISTRY OF DEEDS.

(2) THE PARCEL IS SHOWN AS LOT 27-K AND PORTIONS OF LOT 27-E ON THE TOWN OF WINDHAMS ASSESSORS MAP 9.

(3) BEARINGS ARE GRID NORTH, MAINE STATE PLANE 1802 WEST ZONE, BASED ON GPS OBSERVATIONS DURING APRIL 2018.

(4) VERTICAL DATUM- NAVD 88 BASED ON GPS OBSERVATIONS DURING APRIL 2018.

(5) BOUNDARIES HEREON REPRESENT A RETRACEMENT OF PLAN REFERENCE 1 .

CERTIFICATION:

I CERTIFY THAT THIS SURVEY CONFORMS TO THE STANDARDS OF THE MAINE BOARD OF LICENSURE FOR PROFESSIONAL LAND SURVEYORS AND IS CORRECT TO THE BEST OF MY KNOWLEDGE, INFORMATION AND BELIEF.

7-19-18

WILLIAM C. SHIPPEN P.L.S. 2118

STATE OF MAINE
WILLIAM C. SHIPPEN
2118
PROFESSIONAL LAND SURVEYOR

BOUNDARY SURVEY

SWETT ROAD AND ROUTE 202
WINDHAM, MAINE

FOR: **HOLMAN DEVELOPMENT CORPORATION**
PO BOX 1361
WINDHAM, MAINE 04062
(CLIENT)

SURVEY BY: **SURVEY, INC.**
P.O. BOX 210
WINDHAM, ME 04062
(207) 892-2556
INFO@SURVEYINCORPORATED.COM

DWN: WCS CHK: DRR

DATE: MAY 2018 JOB NO. 18042

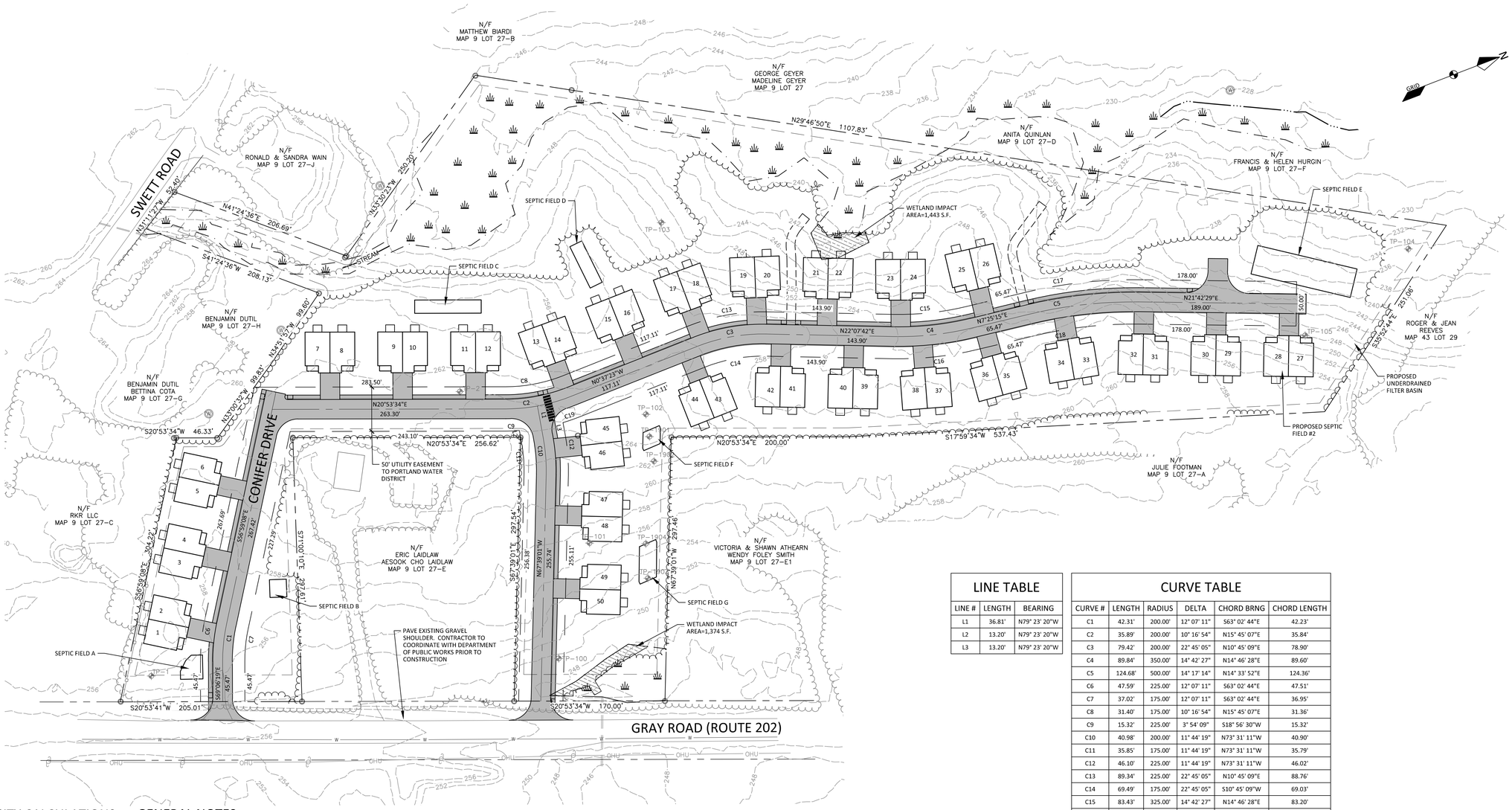

LINE TABLE

LINE #	LENGTH	BEARING
L1	36.81'	N79° 23' 20"W
L2	13.20'	N79° 23' 20"W
L3	13.20'	N79° 23' 20"W

CURVE TABLE

CURVE #	LENGTH	RADIUS	DELTA	CHORD BRNG	CHORD LENGTH
C1	42.31'	200.00'	12° 07' 11"	S63° 02' 44"E	42.23'
C2	35.89'	200.00'	10° 16' 54"	N15° 45' 07"E	35.84'
C3	79.42'	200.00'	22° 45' 05"	N10° 45' 09"E	78.90'
C4	89.84'	350.00'	14° 42' 27"	N14° 46' 28"E	89.60'
C5	124.68'	500.00'	14° 17' 14"	N14° 33' 52"E	124.36'
C6	47.59'	225.00'	12° 07' 11"	S63° 02' 44"E	47.51'
C7	37.02'	175.00'	12° 07' 11"	S63° 02' 44"E	36.95'
C8	31.40'	175.00'	10° 16' 54"	N15° 45' 07"E	31.36'
C9	15.32'	225.00'	3° 54' 09"	S18° 56' 30"W	15.32'
C10	40.98'	200.00'	11° 44' 19"	N73° 31' 11"W	40.90'
C11	35.85'	175.00'	11° 44' 19"	N73° 31' 11"W	35.79'
C12	46.10'	225.00'	11° 44' 19"	N73° 31' 11"W	46.02'
C13	89.34'	225.00'	22° 45' 05"	N10° 45' 09"E	88.76'
C14	69.49'	175.00'	22° 45' 05"	S10° 45' 09"W	69.03'
C15	83.43'	325.00'	14° 42' 27"	N14° 46' 28"E	83.20'
C16	96.26'	375.00'	14° 42' 27"	S14° 46' 28"W	96.00'
C17	130.91'	525.00'	14° 17' 14"	N14° 33' 52"E	130.58'
C18	118.45'	475.00'	14° 17' 14"	S14° 33' 52"W	118.14'
C19	19.06'	225.00'	4° 51' 17"	S1° 48' 16"W	19.06'

NET RESIDENTIAL DENSITY CALCULATIONS:

TOTAL LAND AREA:	498,265 S.F.
DEDUCTIONS:	
1. RIGHT-OF-WAY	0 S.F.
2. STEEP SLOPES (OVER 25%)	0 S.F.
3. 100-YEAR FLOOD PLAIN	0 S.F.
4. RESOURCE PROTECTION DISTRICT	0 S.F.
5. VERY POORLY DRAINED SOILS	31,712 S.F.
6. SURFACE WATERBODIES	0 S.F.
7. SIGNIFICANT WILDLIFE HABITAT	0 S.F.
8. ENDANGERED BOTANICAL RESOURCES	0 S.F.
TOTAL NET AREA:	466,553 S.F.
REQUIRED NET AREA PER DWELLING:	5,000 S.F. (RCCFO DISTRICT)
MAXIMUM ALLOWABLE DWELLINGS:	93
NUMBER OF UNITS PROPOSED:	50

GENERAL NOTES:

1. THE OWNER OF RECORD OF THE PROPERTY IS WELD, LLC BY DEED RECORDED IN THE CUMBERLAND COUNTY REGISTRY OF DEEDS BOOK 33768 PAGE 286 AND BOOK 34816 PAGE 291.
2. TOTAL AREA OF THE PARCEL IS APPROXIMATELY 11.4 ACRES.
3. PARCEL TAX MAP REFERENCE: TOWN OF WINDHAM ASSESSORS MAP 9, LOT 27K.
4. PLAN REFERENCES
   A) "BOUNDARY SURVEY OF SWETT ROAD AND ROUTE 202, WINDHAM, MAINE" FOR HOLMAN DEVELOPMENT CORPORATION PREPARED BY SURVEY, INC. DATED THROUGH MAY 2018.
5. HORIZONTAL DATUM: MAINE STATE PLANE, WEST ZONE, NAD83, U.S. FEET.
6. VERTICAL DATUM: NORTH AMERICAN VERTICAL DATUM OF 1988 (NAVD88)
7. BOUNDARY SHOWN HEREON IS BASED ON PLAN REFERENCE 4A.
8. TOPOGRAPHIC CONTOURS SHOWN HEREON ARE BASED ON LIDAR CONTOURS OBTAINED FROM THE MAINE OFFICE OF GIS.
9. THE PROPERTY IS LOCATED IN THE FARM RESIDENTIAL DISTRICT AND RETIREMENT COMMUNITY AND CARE FACILITY OVERLAY DISTRICT.
10. SPACE AND BULK REQUIREMENTS:

	FR DISTRICT	RCCFO DISTRICT
MIN LOT SIZE:	50,000 S.F.	200,000 S.F.
NET RESIDENTIAL DENSITY	40,000 S.F.	5,000 S.F.
MIN STREET FRONTAGE:	150 FT	
MIN FRONT YARD:	30 FT	
MIN SIDE/REAR YARD:	10 FT	
MAX BUILDING HEIGHT:	35 FT	

11. WETLAND DELINEATION PREPARED IN JUNE 2018 BY MARK HAMPTON ASSOCIATES, INC. AND SUPPLEMENTED IN MARCH 2019 BY MAINELY SOILS, LLC.
12. THE CLEARING LIMITS SHOWN ON THIS PLAN SHALL BE MAINTAINED FOR A PERIOD OF FIVE (5) YEARS FROM THE DATE OF PLANNING BOARD APPROVAL, AND IN ACCORDANCE WITH SECTION 911.E.1.A OF THE LAND USE ORDINANCE. THE PLANNING BOARD MAY APPROVE REVISIONS OR EXPANSIONS TO THE CLEARING LIMITS AS A PLAN AMENDMENT BEFORE THE 5 YEARS.
13. THE TOWN OF WINDHAM SHALL NOT BE RESPONSIBLE FOR THE MAINTENANCE, REPAIR, PLOWING, OR SIMILAR SERVICES FOR THE PRIVATE WAY SHOWN ON THIS PLAN, AND IF THE PRIVATE WAY HAS NOT BEEN BUILT TO PUBLIC WAY STANDARDS, THE TOWN COUNCIL WILL NOT ACCEPT IT AS A PUBLIC WAY.
14. ALL BUILDINGS WILL REQUIRE THE INSTALLATION OF A ROOF DROP EDGE FILTER ALONG THE REAR OF THE BUILDING FOR STORMWATER TREATMENT.
15. THE OWNER RESERVES THE RIGHT TO ADD ADDITIONAL DWELLING UNITS TO THIS PLAN UPON RECEIVING AMENDED SUBDIVISION APPROVAL FROM THE WINDHAM PLANNING BOARD.

LEGEND

EXISTING		PROPOSED
	PROPERTY LINE/R.O.W.	
	ABUTTER PROPERTY LINE	
	SETBACK	
	EASEMENT LINE	
	GRANITE MONUMENT	
	IRON PIN/DRILL HOLE	
	CENTERLINE	
	BUILDING	
	EDGE OF PAVEMENT/CURB	
	EDGE OF WETLANDS	
200	CONTOUR LINE	200

APPROVED - WINDHAM PLANNING BOARD:

CHAIRPERSON DATE

STATE OF MAINE DUSTIN M. ROMA No. 12131 LICENSED PROFESSIONAL ENGINEER 4-22-19

DM ROMA
CONSULTING ENGINEERS
P.O. BOX 1116
WINDHAM, ME 04062
(207) 310 - 0506

REV	DATE	BY	DESCRIPTION
A	4-22-19	DMR	ISSUED TO TOWN FOR PRELIMINARY REVIEW

AMENDED SUBDIVISION PLAN

WOODSIDE CONDOMINIUM RETIREMENT COMMUNITY - PHASE 2
WINDHAM, MAINE

FOR:
WELD,LLC
PO BOX 1361
WINDHAM, MAINE 04062

17070
JOB NUMBER:

1" = 60'
SCALE:

4-22-2019
DATE:

SHEET 3 OF 14

ASB-1

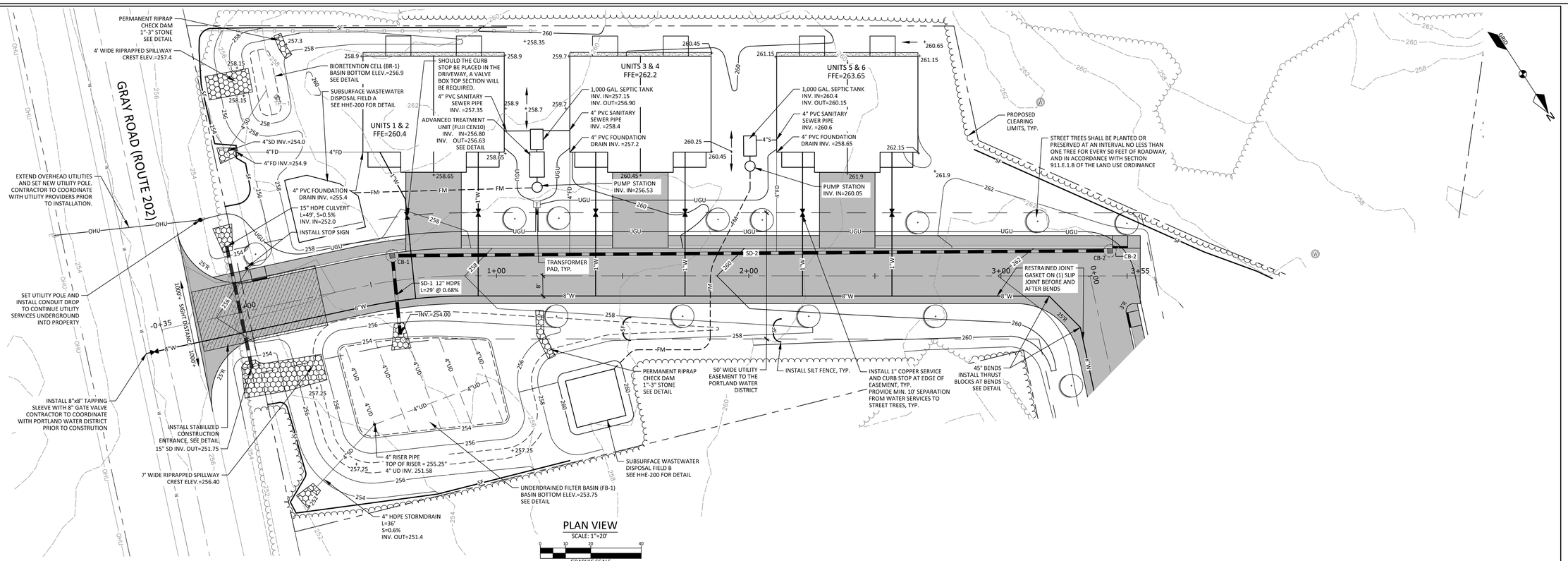

PLAN VIEW
SCALE: 1"=20'
GRAPHIC SCALE

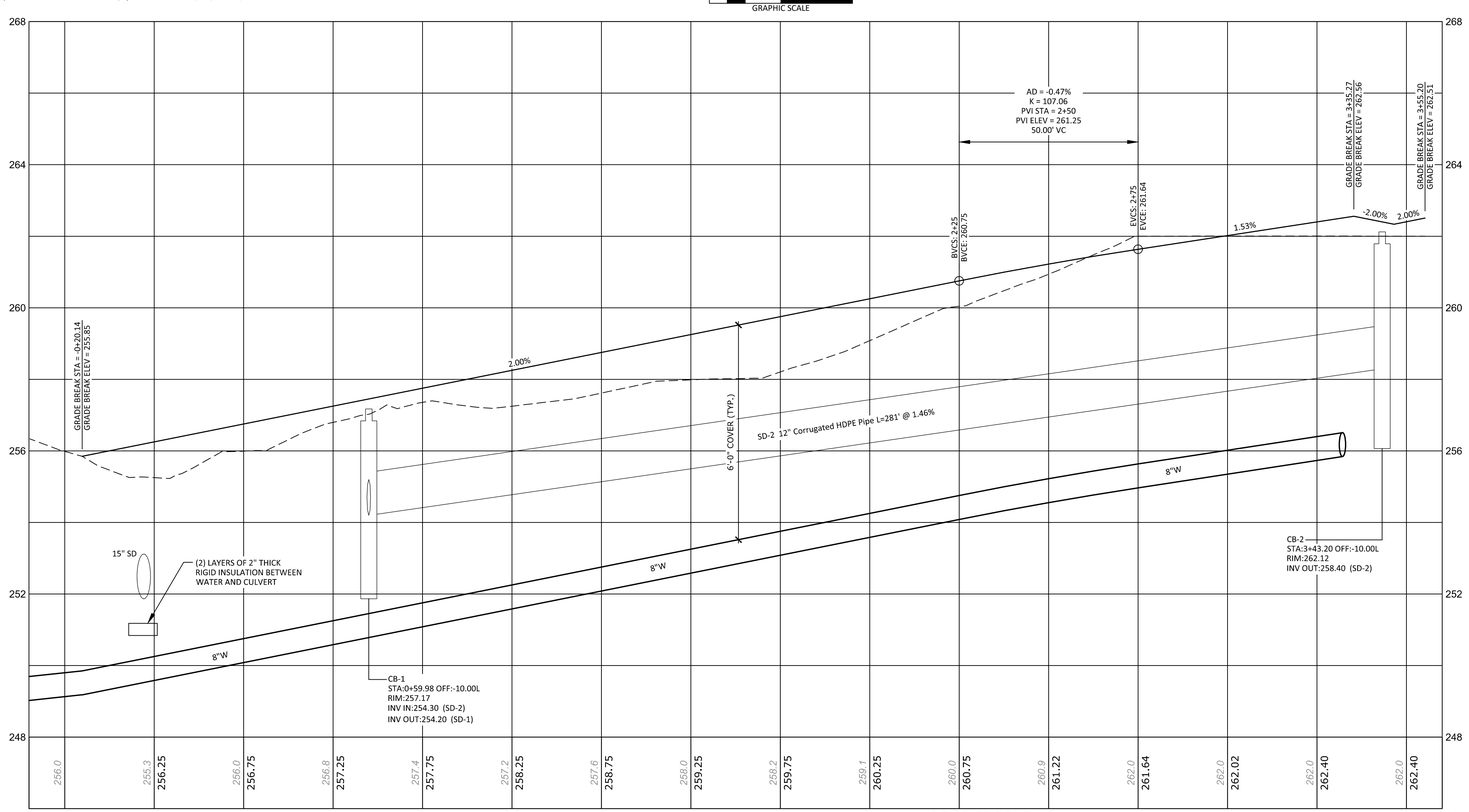

ROAD PROFILE
SCALE: HORIZ.: 1"=20'
VERT.: 1"=2'

LEGEND

EXISTING		PROPOSED
	PROPERTY LINE/R.O.W.	
	ABUTTER PROPERTY LINE	
	EASEMENT LINE	
	CENTERLINE	
	BUILDING	
	EDGE OF PAVEMENT/CURB	
	EDGE OF GRAVEL	
	EDGE OF WETLANDS	
200 201	CONTOUR LINE	200 201
	TREELINE	
	CATCHBASIN	
	CULVERT/STORMDRAIN	
	UNDERDRAIN	UD
S	SEWER MANHOLE	
S	SANITARY SEWER PIPE	S
FM	FORCE MAIN	FM
W	WATER MAIN	W
	WATER VALVE	
	UTILITY POLE	
OHU	OVERHEAD UTILITIES	OHU
UGU	UNDERGROUND UTILITIES	UGU
	TRANSFORMER PAD	T
	RIPRAP	
	SILT FENCE	SF

STATE OF MAINE DUSTIN M. ROMA No. 12181 PROFESSIONAL ENGINEER
4-22-19

DM ROMA
CONSULTING ENGINEERS
P.O. BOX 1116
WINDHAM, ME 04062
(207) 310 - 0506

REV	DATE	BY	DESCRIPTION
A	4-22-19	DMR	ISSUED TO TOWN FOR PRELIMINARY REVIEW

PLAN & PROFILE

GRAY ROAD RETIREMENT COMMUNITY
WINDHAM, MAINE

FOR:
WELD,LLC
PO BOX 1361
WINDHAM, MAINE 04062

17070
JOB NUMBER:

AS NOTED
SCALE:

4-22-2019
DATE:

SHEET 4 OF 14

PP-1

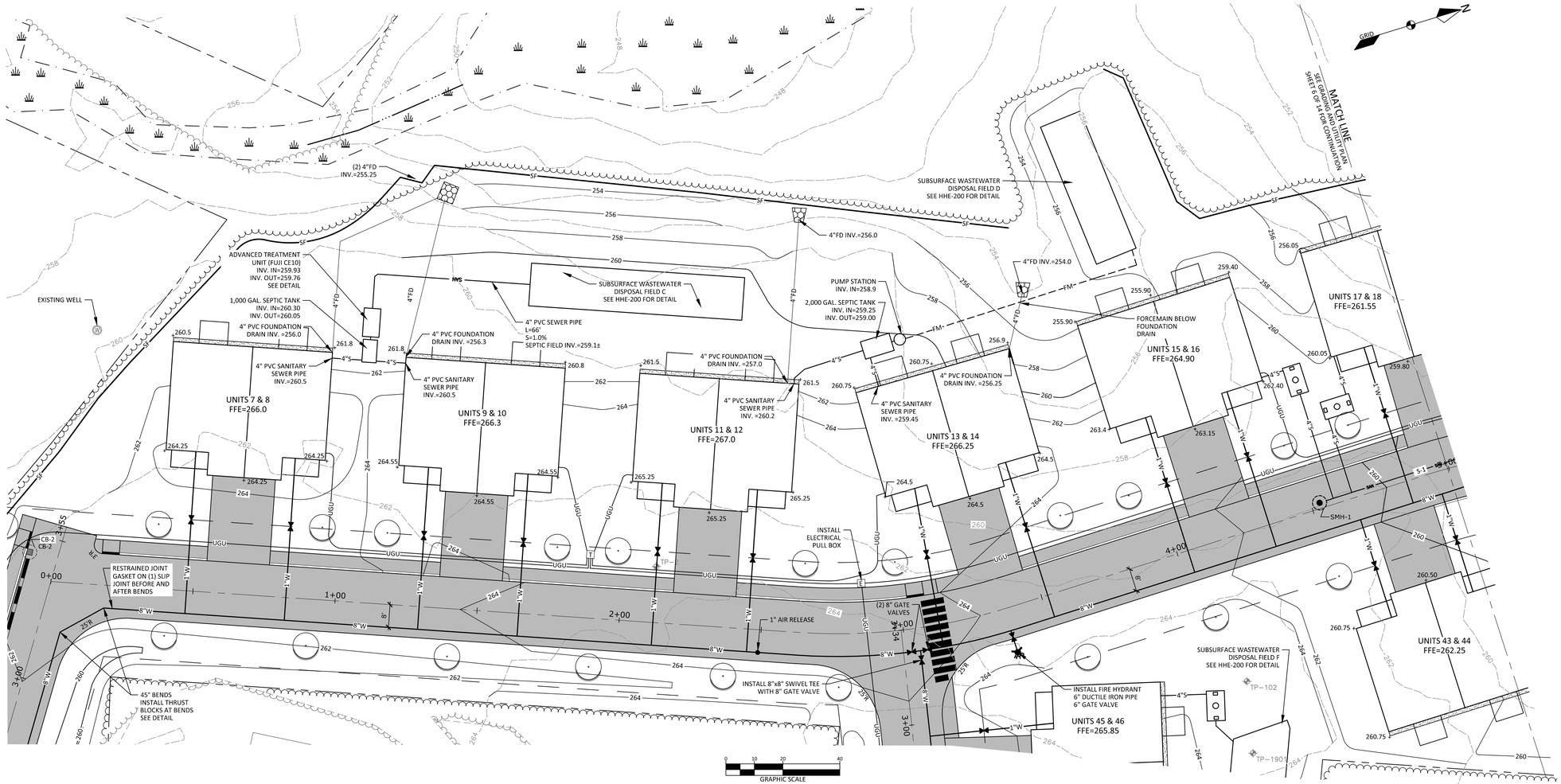

STORM DRAIN STRUCTURE TABLE			
STRUCTURE	RIM	INV. IN	INV. OUT
CB-2	262.12		258.40 (SD-2)

STORM DRAIN PIPE TABLE			
NAME	SIZE	LENGTH	SLOPE
SD-2	12"	285'	1.46%

SEWER STRUCTURE TABLE			
STRUCTURE	RIM	INV. IN	INV. OUT
SMH-1	260.91		255.75 (S-1)

SEWER PIPE TABLE			
NAME	SIZE	LENGTH	SLOPE
S-1	8"	89'	4.34%

LEGEND

EXISTING		PROPOSED
	PROPERTY LINE/R.O.W.	
	ABUTTER PROPERTY LINE	
	EASEMENT LINE	
	CENTERLINE	
	BUILDING	
	EDGE OF PAVEMENT/CURB	
	EDGE OF GRAVEL	
	EDGE OF WETLANDS	
200 201	CONTOUR LINE	200 201
	TREELINE	
	CATCHBASIN	
	CULVERT/STORMDRAIN	
	UNDERDRAIN	UD
	SEWER MANHOLE	
S	SANITARY SEWER PIPE	S
FM	FORCE MAIN	FM
W	WATER MAIN	W
WV	WATER VALVE	
	UTILITY POLE	
OHU	OVERHEAD UTILITIES	OHU
UGU	UNDERGROUND UTILITIES	UGU
	TRANSFORMER PAD	T
	ELECTRICAL PULL BOX	E
	RIPRAP	
	SILT FENCE	SF

STATE OF MAINE
DUSTIN M. ROMA
No. 12131
PROFESSIONAL ENGINEER
4-22-19

DM ROMA
CONSULTING ENGINEERS
P.O. BOX 1116
WINDHAM, ME 04062
(207) 310 - 0506

REV.	DATE	BY	DESCRIPTION
A	4-22-19	DMR	ISSUED TO TOWN FOR PRELIMINARY REVIEW

GRADING AND UTILITY PLAN

WOODSIDE CONDOMINIUM RETIREMENT COMMUNITY
WINDHAM, MAINE

FOR:
WELD,LLC
PO BOX 1361
WINDHAM, MAINE 04062

17070	JOB NUMBER:
AS NOTED	SCALE:
4-22-2019	DATE:
SHEET 5 OF 14	
GU-1	

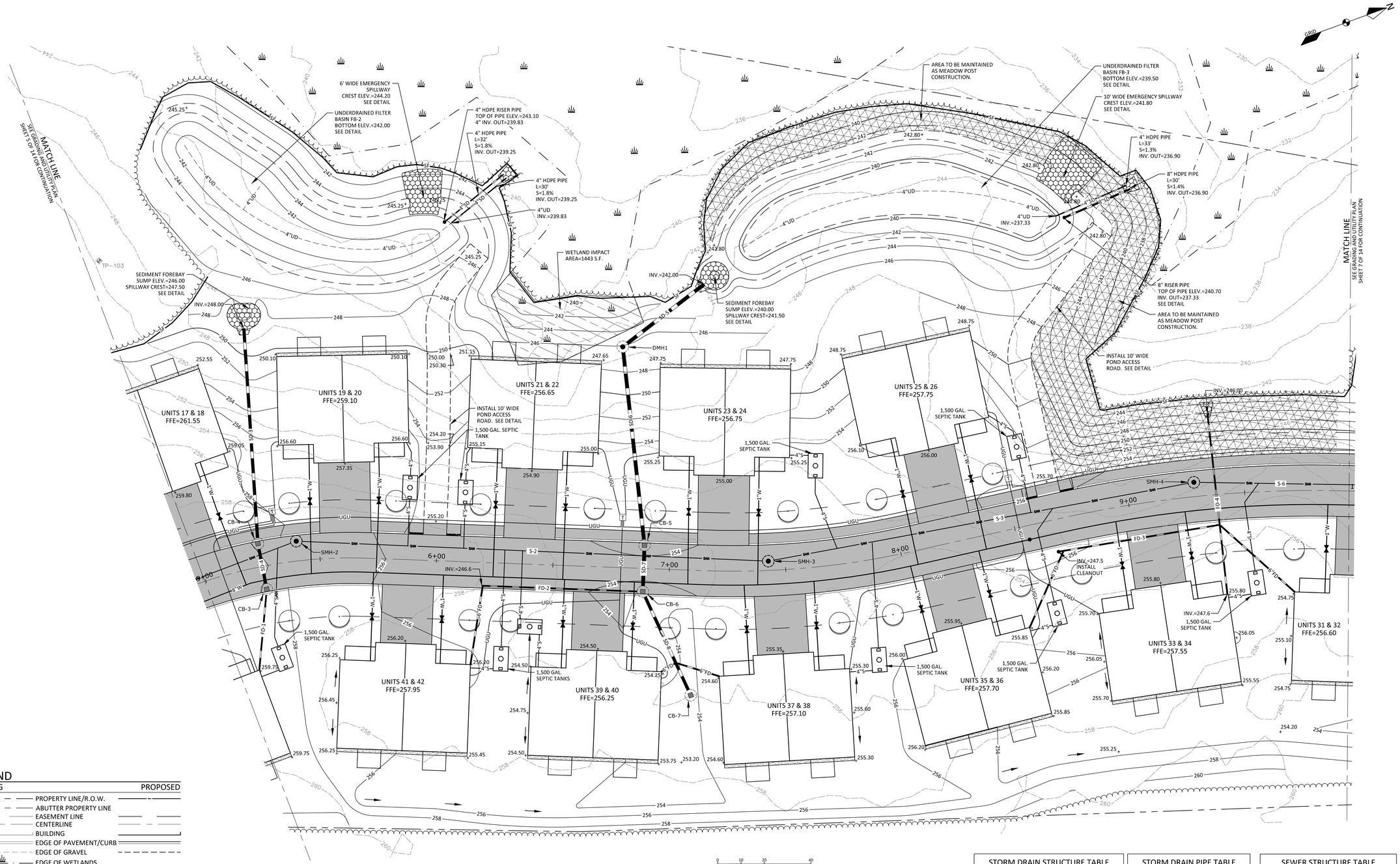

LEGEND

EXISTING		PROPOSED
	PROPERTY LINE/R.O.W.	
	ABUTTER PROPERTY LINE	
	EASEMENT LINE	
	CENTERLINE	
	BUILDING	
	EDGE OF PAVEMENT/CURB	
	EDGE OF GRAVEL	
	EDGE OF WETLANDS	
200 201	CONTOUR LINE	200 201
	TREELINE	
	CATCHBASIN	
	CULVERT/STORMDRAIN	
	UNDERDRAIN	UD
S	SEWER MANHOLE	
S	SANITARY SEWER PIPE	S
FM	FORCE MAIN	FM
W	WATER MAIN	W
WV	WATER VALVE	
	UTILITY POLE	
OHU	OVERHEAD UTILITIES	OHU
UGU	UNDERGROUND UTILITIES	UGU
	TRANSFORMER PAD	T
	RIPRAP	
	SILT FECE	SF

STORM DRAIN STRUCTURE TABLE

STRUCTURE	RIM	INV. IN	INV. OUT
CB-3	257.90	251.35 (FD-1)	249.35 (SD-4)
CB-4	257.90	249.15 (SD-4)	249.05 (SD-3)
CB-5	253.91	244.55 (SD-7)	244.45 (SD-6)
CB-6	253.91	245.00 (SD-8) 245.85 (FD-2)	244.75 (SD-7)
CB-7	256.00		245.15 (SD-8)
DMH1	246.25	242.75 (SD-6)	242.65 (SD-5)

STORM DRAIN PIPE TABLE

NAME	SIZE	LENGTH	SLOPE
FD-1	6"	35'	2.74%
FD-2	6"	69'	1.19%
FD-3	6"	70'	1.18%
FD-4	6"	78'	1.99%
SD-3	12"	93'	1.16%
SD-4	12"	20'	1.25%
SD-5	15"	44'	1.55%
SD-6	15"	86'	2.08%
SD-7	15"	20'	1.25%
SD-8	12"	49'	0.33%

SEWER STRUCTURE TABLE

STRUCTURE	RIM	INV. IN	INV. OUT
SMH-2	257.31	252.05 (S-1)	251.95 (S-2)
SMH-3	254.55	247.95 (S-2)	247.85 (S-3)
SMH-4	255.15	245.20 (S-3)	245.10 (S-6)

SEWER PIPE TABLE

NAME	SIZE	LENGTH	SLOPE
S-1	8"	89'	4.34%
S-2	8"	203'	2.01%
S-3	8"	186'	1.46%
S-6	8"	74'	1.06%

STATE OF MAINE
DUSTIN M. ROMA
No. 12131
LICENSED
PROFESSIONAL ENGINEER
4-22-19

DM ROMA
CONSULTING ENGINEERS
P.O. BOX 1116
WINDHAM, ME 04062
(207) 310 - 0506

REV	DATE	BY	DESCRIPTION
A	4-22-19	DMR	ISSUED TO TOWN FOR PRELIMINARY REVIEW

GRADING AND UTILITY PLAN

WOODSIDE CONDOMINIUM RETIREMENT COMMUNITY
WINDHAM, MAINE

FOR:
WELD,LLC
PO BOX 1361
WINDHAM, MAINE 04062

17070
JOB NUMBER:

AS NOTED
SCALE:

4-22-2019
DATE:

SHEET 6 OF 14

GU-2

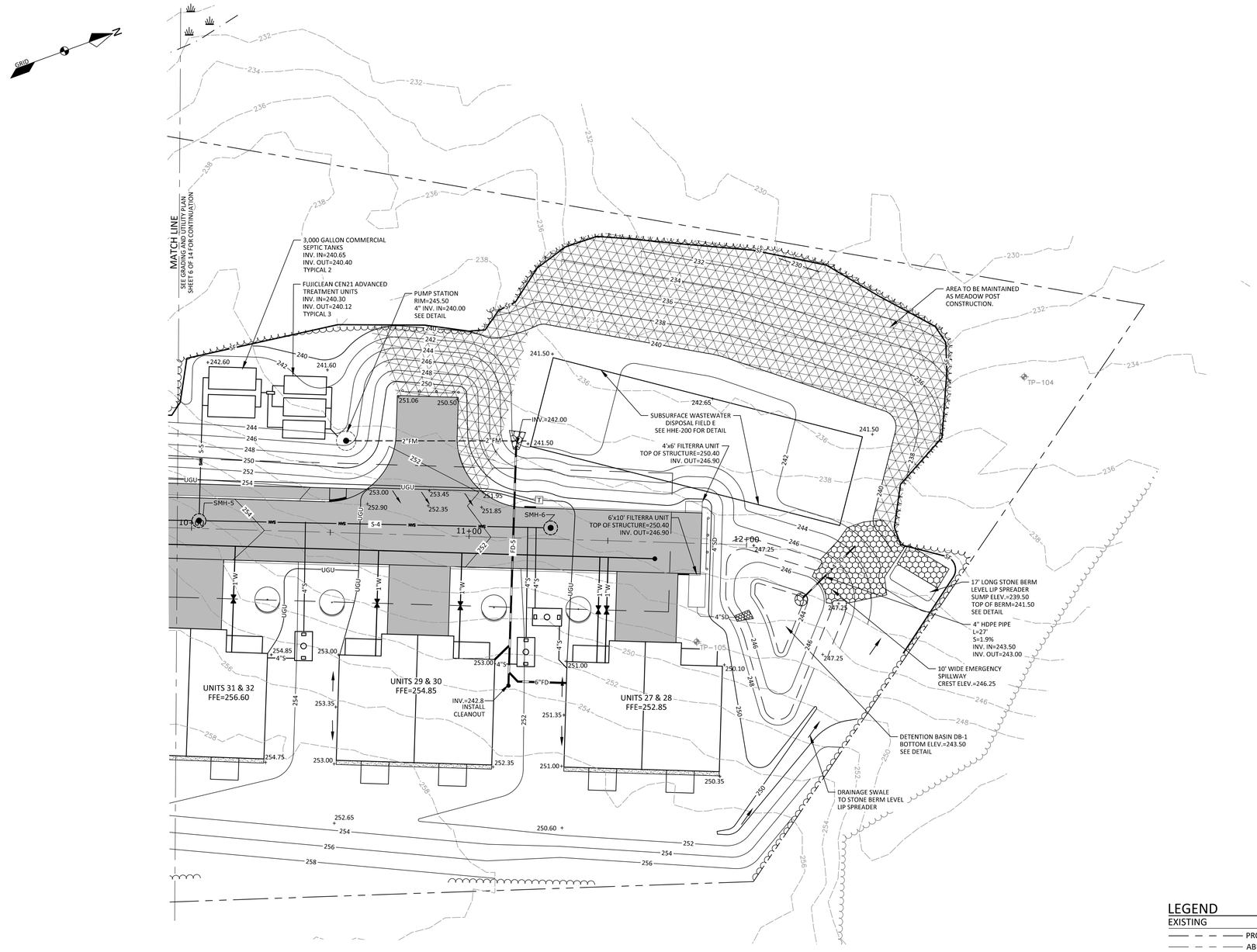

SEWER STRUCTURE TABLE			
STRUCTURE	RIM	INV. IN	INV. OUT
SMH-5	254.38	244.35 (S-4) 244.35 (S-6)	244.25 (S-5)
SMH-6	251.38		246.00 (S-4)

SEWER PIPE TABLE			
NAME	SIZE	LENGTH	SLOPE
S-4	8"	127'	1.34%
S-5	8"	42'	9.10%
S-6	8"	74'	1.06%

LEGEND

EXISTING		PROPOSED
	PROPERTY LINE/R.O.W.	
	ABUTTER PROPERTY LINE	
	EASEMENT LINE	
	CENTERLINE	
	BUILDING	
	EDGE OF PAVEMENT/CURB	
	EDGE OF GRAVEL	
	EDGE OF WETLANDS	
200 201	CONTOUR LINE	200 201
	TREELINE	
	CATCHBASIN	
	CULVERT/STORMDRAIN	
	UNDERDRAIN	UD
	SEWER MANHOLE	
S	SANITARY SEWER PIPE	S
FM	FORCE MAIN	FM
W	WATER MAIN	W
WV	WATER VALVE	
	UTILITY POLE	
OHU	OVERHEAD UTILITIES	OHU
UGU	UNDERGROUND UTILITIES	UGU
	TRANSFORMER PAD	T
	RIPRAP	
	SILT FENCE	SF

STATE OF MAINE
DUSTIN M. ROMA
No. 12131
PROFESSIONAL ENGINEER
4-22-19

DM ROMA
CONSULTING ENGINEERS
P.O. BOX 1116
WINDHAM, ME 04062
(207) 310 - 0506

REV.	DATE	BY	DESCRIPTION
A	4-22-19	DMR	ISSUED TO TOWN FOR PRELIMINARY REVIEW

GRADING AND UTILITY PLAN

WOODSIDE CONDOMINIUM RETIREMENT COMMUNITY
WINDHAM, MAINE

FOR:
WELD,LLC
PO BOX 1361
WINDHAM, MAINE 04062

17070
JOB NUMBER:

AS NOTED
SCALE:

4-22-2019
DATE:

SHEET 7 OF 14

GU-3

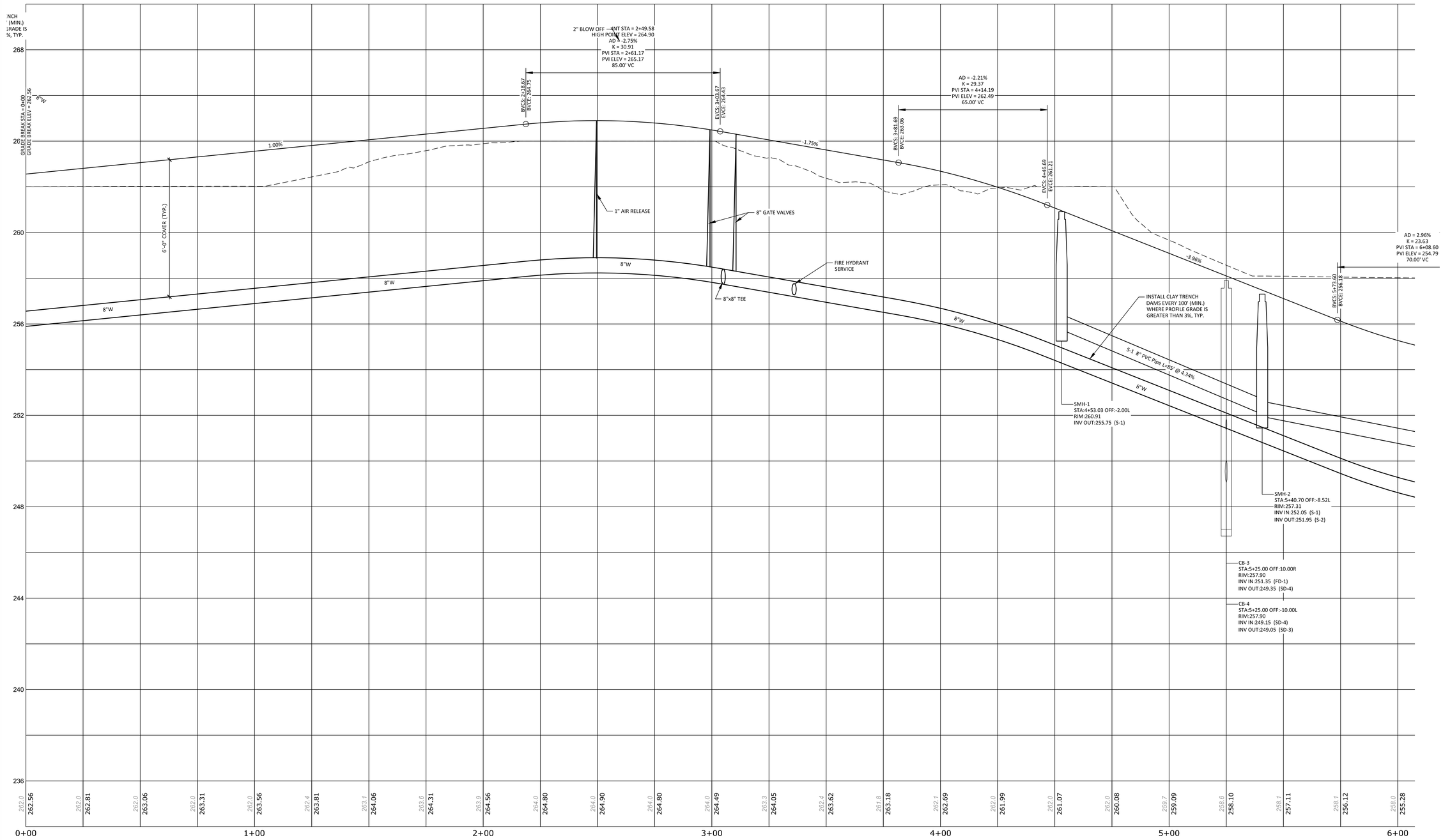

ROAD PROFILE

SCALE: HORIZ.: 1"=20'
VERT.: 1"=2'

0 10 20 40
GRAPHIC SCALE

STATE OF MAINE
DUSTIN M. ROMA
No. 12131
LICENSED
PROFESSIONAL ENGINEER
4-22-19

DM ROMA
CONSULTING ENGINEERS
P.O. BOX 1116
WINDHAM, ME 04062
(207) 310 - 0506

REV	DATE	BY	DESCRIPTION
A	4-22-19	DMR	ISSUED TO TOWN FOR PRELIMINARY REVIEW

ROADWAY PROFILE

WOODSIDE CONDOMINIUM RETIREMENT COMMUNITY
WINDHAM, MAINE

FOR:
WELD,LLC
PO BOX 1361
WINDHAM, MAINE 04062

17070
JOB NUMBER:

AS NOTED
SCALE:

4-22-2019
DATE:

SHEET 8 OF 14

P-1

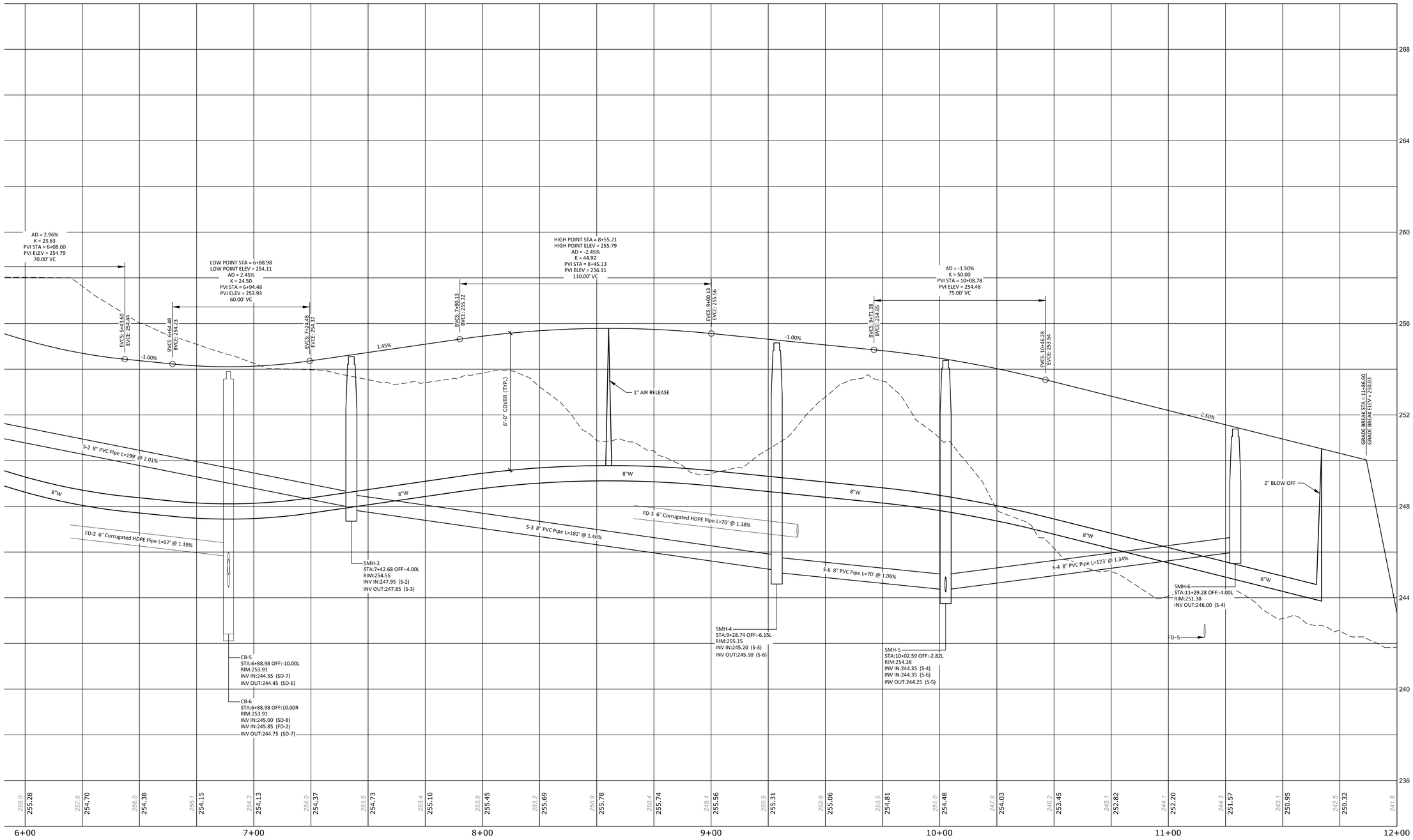

ROAD PROFILE

SCALE: HORIZ.: 1"=20'
VERT.: 1"=2'

0 10 20 40
GRAPHIC SCALE

STATE OF MAINE
DUSTIN M. ROMA
No. 12131
PROFESSIONAL ENGINEER
4-22-19

DM ROMA
CONSULTING ENGINEERS
P.O. BOX 1116
WINDHAM, ME 04062
(207) 310 - 0506

REV	DATE	BY	DESCRIPTION
A	4-22-19	DMR	ISSUED TO TOWN FOR PRELIMINARY REVIEW

ROADWAY PROFILE

WOODSIDE CONDOMINIUM RETIREMENT COMMUNITY
WINDHAM, MAINE

FOR:
WELD,LLC
PO BOX 1361
WINDHAM, MAINE 04062

17070	JOB NUMBER:
AS NOTED	SCALE:
4-22-2019	DATE:
SHEET 9 OF 14	
P-2	

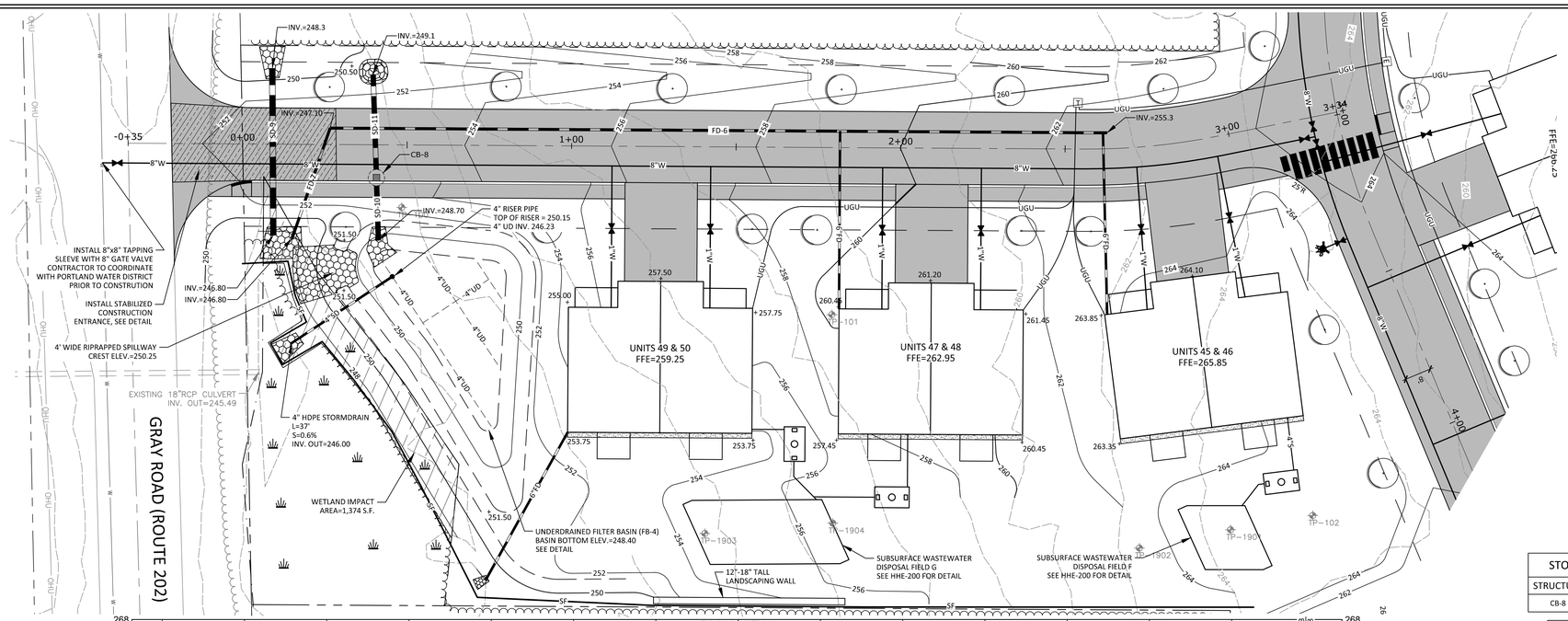

PLAN VIEW

SCALE: 1"=20'

GRAPHIC SCALE

STORM DRAIN STRUCTURE TABLE			
STRUCTURE	RIM	INV. IN	INV. OUT
CB-8	252.90	248.90 (SD-11)	248.80 (SD-10)

STORM DRAIN PIPE TABLE			
NAME	SIZE	LENGTH	SLOPE
FD-6	8"	236'	3.47%
FD-7	8"	35'	0.85%
SD-9	18"	51'	2.96%
SD-10	15"	19'	0.59%
SD-11	15"	31'	0.68%

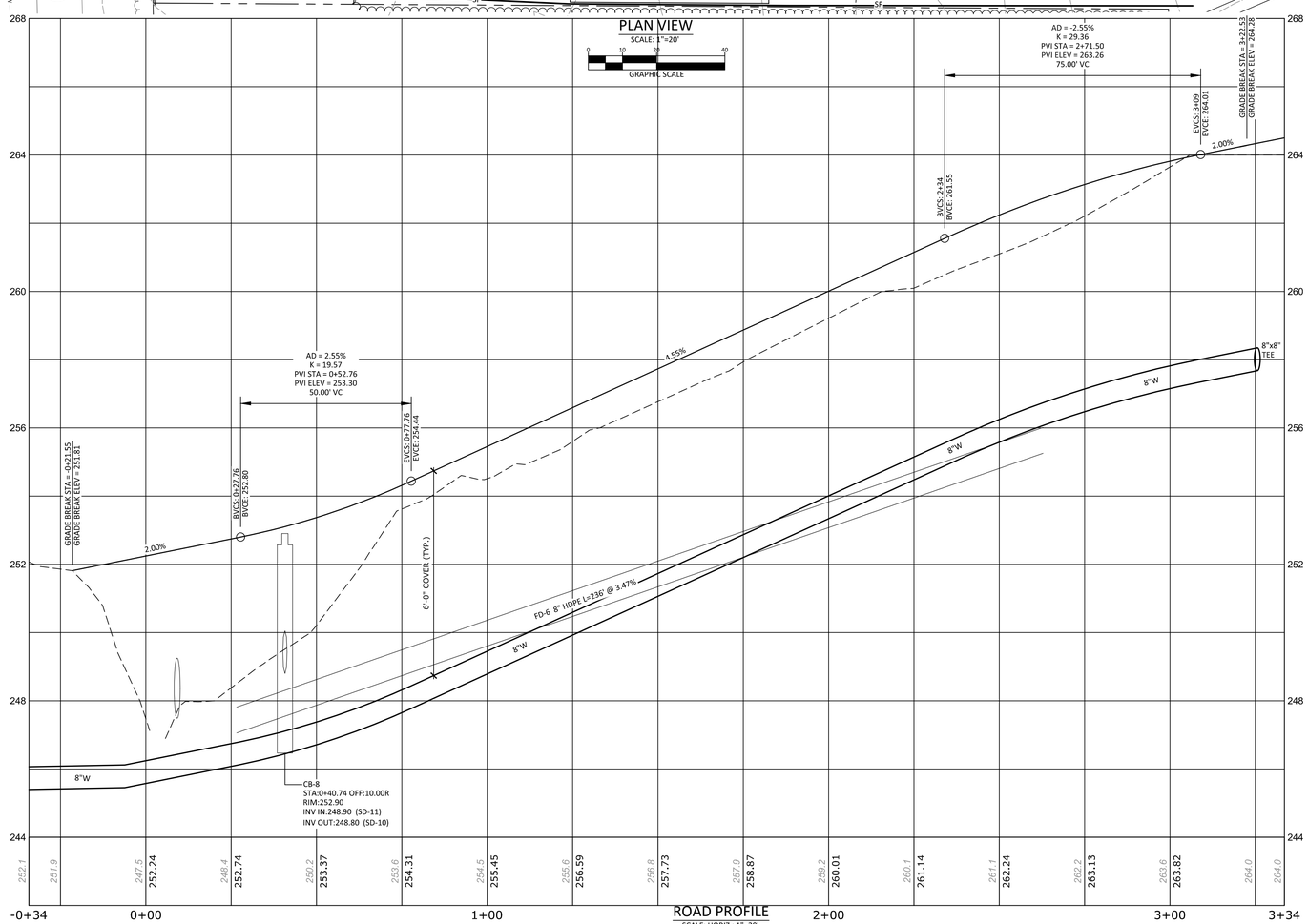

ROAD PROFILE

SCALE: HORIZ.: 1"=20'
VERT.: 1"=2'

LEGEND

EXISTING		PROPOSED
	PROPERTY LINE/R.O.W.	
	ABUTTER PROPERTY LINE	
	EASEMENT LINE	
	CENTERLINE	
	BUILDING	
	EDGE OF PAVEMENT/CURB	
	EDGE OF GRAVEL	
	EDGE OF WETLANDS	
200 201	CONTOUR LINE	200 201
	TREELINE	
	CATCHBASIN	
	CULVERT/STORMDRAIN	
	UNDERDRAIN	UD
	SEWER MANHOLE	
S	SANITARY SEWER PIPE	S
FM	FORCE MAIN	FM
W	WATER MAIN	W
WV	WATER VALVE	
	UTILITY POLE	
OHU	OVERHEAD UTILITIES	OHU
UGU	UNDERGROUND UTILITIES	UGU
	TRANSFORMER PAD	T
	RIPRAP	
	SILT FENCE	SF

STATE OF MAINE
DUSTIN M. ROMA
ROMA
No. 12131
LICENSED
PROFESSIONAL ENGINEER
4-22-19

DM ROMA
CONSULTING ENGINEERS
P.O. BOX 1116
WINDHAM, ME 04062
(207) 310 - 0506

REV	DATE	BY	DESCRIPTION
A	4-22-19	DMR	ISSUED TO TOWN FOR PRELIMINARY REVIEW

PLAN & PROFILE: SECONDARY ROAD CONNECTION

WOODSIDE CONDOMINIUM RETIREMENT COMMUNITY
WINDHAM, MAINE

FOR:
WELD,LLC
PO BOX 1361
WINDHAM, MAINE 04062

17070	JOB NUMBER:
AS NOTED	SCALE:
4-22-2019	DATE:
SHEET 10 OF 14	
PP-2	

EROSION AND SEDIMENTATION CONTROL NOTES:

IN ORDER TO EFFECTIVELY PREVENT AND CONTROL EROSION RELATED TO SOIL DISTURBANCE, THE FOLLOWING BEST MANAGEMENT PRACTICES (BMPS) SHALL BE EMPLOYED:

1. POLLUTION PREVENTION

MINIMIZE DISTURBED AREAS AND PROTECT NATURAL DOWNGRADIENT BUFFER AREAS TO THE EXTENT PRACTICABLE. CONTROL STORMWATER VOLUME AND VELOCITY WITHIN THE SITE TO MINIMIZE SOIL EROSION. MINIMIZE THE DISTURBANCE OF STEEP SLOPES. CONTROL STORMWATER DISCHARGES, INCLUDING BOTH PEAK FLOW RATES AND VOLUME, TO MINIMIZE EROSION AT OUTLETS. THE DISCHARGE MAY NOT RESULT IN EROSION OF ANY OPEN DRAINAGE CHANNELS, SWALES, STREAM CHANNELS OR STREAM BANKS, UPLAND, OR COASTAL OR FRESHWATER WETLANDS OFF THE PROJECT SITE.

WHENEVER PRACTICABLE, NO DISTURBANCE ACTIVITIES SHOULD TAKE PLACE WITHIN 50 FEET OF ANY PROTECTED NATURAL RESOURCE. IF DISTURBANCE ACTIVITIES TAKE PLACE BETWEEN 30 FEET AND 50 FEET OF ANY PROTECTED NATURAL RESOURCE, AND STORMWATER DISCHARGES THROUGH THE DISTURBED AREAS TOWARD THE PROTECTED NATURAL RESOURCE, PERIMETER EROSION CONTROLS MUST BE DOUBLED. IF DISTURBANCE ACTIVITIES TAKE PLACE LESS THAN 30 FEET FROM ANY PROTECTED NATURAL RESOURCE, AND STORMWATER DISCHARGES THROUGH THE DISTURBED AREAS TOWARD THE PROTECTED NATURAL RESOURCE, PERIMETER EROSION CONTROLS MUST BE DOUBLED AND DISTURBED AREAS MUST BE TEMPORARILY OR PERMANENTLY STABILIZED WITHIN 7 DAYS.

2. TEMPORARY SOIL STABILIZATION BMPS

TEMPORARY MULCHING SHALL BE APPLIED IMMEDIATELY TO ANY AREAS THAT HAVE BEEN TEMPORARILY OR PERMANENTLY SEEDED. ANY DISTURBED SOIL WITHIN 75' OF A STREAM, WATER BODY OR WETLAND MUST RECEIVE TEMPORARY MULCH WITHIN 48 HOURS FOLLOWING DISTURBANCE AND BEFORE ANY STORM EVENT. ALL OTHER AREAS SHALL RECEIVE TEMPORARY MULCH WITHIN 7 DAYS OF DISTURBANCE. AREAS WHICH CANNOT BE SEEDED DURING THE GROWING SEASON SHALL BE MULCHED FOR OVER-WINTER PROTECTION. THE FOLLOWING ARE ACCEPTABLE TEMPORARY MULCHING METHODS:

HAY OR STRAW MULCHES NEED TO BE AIR-DRIED, FREE OF UNDESIRABLE SEEDS AND COARSE MATERIALS. APPLICATION RATE MUST BE 2 BALES (70-90 POUNDS) PER 1000 SQ FT OR 1.5 TO 2 TONS (90-100 BALES) PER ACRE TO COVER 75-90% OF THE GROUND SURFACE. HAY OR STRAW CAN BE DRIVEN INTO THE GROUND WITH TRACKED EQUIPMENT IF SLOPES ARE LESS THAN 3%, OR CAN BE ANCHORED WITH JUTE, WOOD FIBER OR PLASTIC NETTING ON STEEPER SLOPES.

EROSION CONTROL MIX MUST CONSIST PRIMARILY OF ORGANIC MATERIAL AND WILL INCLUDE ANY OF THE FOLLOWING: SHREDDED BARK, STUMP GRINDINGS, COMPOSTED BARK OR OTHER ACCEPTABLE PRODUCTS BASED ON A SIMILAR RAW SOURCE. WOOD OR BARK CHIPS, GROUND CONSTRUCTION DEBRIS OR REPROCESSED WOOD PRODUCTS ARE NOT ACCEPTABLE. EROSION CONTROL MIX CAN BE USED AS A STAND-ALONE REINFORCEMENT ON SLOPES OF 2 HORIZONTAL TO 1 VERTICAL OR LESS AND DRAINING IN SHEET FLOW. IT CAN BE PLACED WITH A HYDRAULIC BUCKET, WITH A PNEUMATIC BLOWER OR BY HAND, AND MUST PROVIDE 100% SOIL COVERAGE.

EROSION CONTROL MIX SHALL MEET THE FOLLOWING SPECIFICATIONS:
-ORGANIC MATTER CONTENT SHALL BE BETWEEN 80-100%, DRY WEIGHT BASIS.
-PARTICLE SIZE BY WEIGHT SHALL BE 100% PASSING A 6 IN. SCREEN AND BETWEEN 70-85% PASSING 0.75 IN. SCREEN
-ORGANIC PORTION NEEDS TO BE FIBROUS AND ELONGATED
-LARGE PORTIONS OF SILTS, CLAYS OR FINE SANDS ARE NOT ACCEPTABLE IN THE MIX

WHEN USED AS MULCH, THE THICKNESS OF THE ERISION CONTROL MIX IS BASED UPON THE FOLLOWING:

LENGTH OF SLOPE	3:1 SLOPE OR LESS	BETWEEN 2:1 AND 3:1 SLOPE
LESS THAN 20 FT	2.0 IN.	4.0 IN.
BETWEEN 20 - 60 FT	3.0 IN.	5.0 IN.
BETWEEN 60 - 100 FT	4.0 IN.	6.0 IN.

CHEMICAL MULCHES AND SOIL BINDERS MAY BE USED AS DIRECTED BY THE ENGINEER. THE CONTRACTOR SHALL CONSULT WITH THE MANUFACTURER TO DETERMINE ADEQUATE APPLICATION RATES AND METHODS.

EROSION CONTROL BLANKETS AND MATS SHALL BE USED ON STEEP SLOPES AND IN THE BOTTOM OF GRASSED WATERWAYS, OR AS OTHERWISE DIRECTED BY THE ENGINEER. THE MAT SHALL BE INSTALLED WITH FIRM CONTINUOUS CONTACT WITH THE SOIL AND STAPLED ACCORDING TO THE MANUFACTURER'S RECOMMENDATIONS.

TEMPORARY MULCH SHALL BE INSPECTED FOLLOWING ANY SIGNIFICANT RAINFALL EVENT. IF LESS THAN 90% OF THE SOIL SURFACE IS COVERED BY MULCH, ADDITIONAL MULCH SHALL BE IMMEDIATELY APPLIED. EROSION CONTROL MATS AND MULCH ANCHORING MUST BE INSPECTED AFTER RAINFALL EVENTS FOR DISLOCATION OR FAILURE, AND REPAIRED IMMEDIATELY. INSPECTIONS SHALL TAKE PLACE UNTIL 95% OF THE SOIL SURFACE IS COVERED WITH PERMANENT VEGETATION. WHERE MULCH IS USED WITH ORNAMENTAL PLANTINGS, INSPECT PERIODICALLY THROUGHOUT THE YEAR TO DETERMINE IF MULCH IS MAINTAINING COVERAGE OF THE SOIL SURFACE, AND REPAIR AS NEEDED.

TEMPORARY VEGETATION SHALL BE ESTABLISHED ON SOILS THAT WILL NOT BE BROUGHT TO FINAL GRADE FOR A PERIOD OF MORE THAN 30 DAYS. IF TEMPORARY VEGETATION CANNOT BE ESTABLISHED PRIOR TO OCTOBER 15, TEMPORARY MULCH SHALL BE APPLIED THROUGH THE WINTER AND TEMPORARY VEGETATION SHALL BE PLANTED AT THE BEGINNING OF THE GROWING SEASON THE FOLLOWING YEAR. TO PREPARE THE SEEDBED, THE CONTRACTOR SHALL APPLY FERTILIZER AT A RATE OF 600 POUNDS PER ACRE OF 10-10-10 (N-P205-K20) OR EQUIVALENT AND LIMESTONE AT A RATE OF 3 TONS PER ACRE, IF NECESSARY. LOOSEN SOIL TO A DEPTH OF 2 INCHES IN AREAS THAT HAVE BEEN COMPACTED BY CONSTRUCTION ACTIVITIES. GRASS SEED SHALL BE SELECTED BASED UPON THE TIME OF YEAR THE PLANTING WILL TAKE PLACE AS SUMMARIZED IN THE FOLLOWING TABLE:

SEED	LB. PER ACRE	RECOMMENDED SEEDING DATES
WINTER RYE	112	8/15 - 10/1
OATS	80	4/1 - 7/1 8/15 - 9/15
ANNUAL RYEGRASS	40	4/1 - 7/1

TEMPORARY SEEDING SHALL BE PERIODICALLY INSPECTED TO MAINTAIN AT LEAST 95% VEGETATIVE COVER OF SOIL SURFACE. IF ANY EVIDENCE OF EROSION OR SEDIMENTATION IS APPARENT, REPAIRS SHALL BE MADE AND OTHER TEMPORARY MEASURES SHALL BE USED IN THE INTERIM SUCH AS TEMPORARY MULCH, FILTER BARRIERS, ETC.

3. SEDIMENT BARRIER BMPS

PRIOR TO CONSTRUCTION TEMPORARY SEDIMENT BARRIERS SHALL BE INSTALLED AT THE DOWNGRADIENT EDGE OF ANY AREA TO BE DISTURBED AND ADJACENT TO ANY DRAINAGE CHANNELS WITHIN THE DISTURBED AREA . SEDIMENT BARRIERS INCLUDE ANY OF THE FOLLOWING:

FILTER BARRIER FENCE, ALSO CALLED SILT FENCE, SHALL BE INSTALLED WHERE SHOWN ON THE PLANS AND IN ACCORDANCE WITH MANUFACTURERS RECOMMENDATIONS. THE FILTER FABRIC SHALL BE A PERVIOUS SHEET OF PROPYLENE, NYLON, POLYESTER OR ETHYLENE YARN AND SHALL PROVIDE A MINIMUM OF 6 MONTHS USABLE CONSTRUCTION LIFE INCLUDING PROTECTION AGAINST ULTRA-VIOLET LIGHT. THE HEIGHT OF THE FENCE SHALL NOT EXCEED 36 INCHES INSTALLED AND POST SPACING SHALL NOT EXCEED 6 FEET. JOINTS IN THE FENCE SHALL BE AVOIDED TO THE EXTENT POSSIBLE, AND IF NECESSARY SHALL BE SPLICED TOGETHER AT A SUPPORT POST WITH A MINIMUM 6 INCH OVERLAP. A TRENCH SHALL BE EXCAVATED APPROXIMATELY 4 INCHES WIDE AND 4 INCHES DEEP, AND THE BOTTOM 6-8 INCHES OF FABRIC SHALL BE "TOED-IN" TO THE TRENCH AND COMPACTED. THE TRENCH SHOULD BE UPHILL OF THE FABRIC PRIOR TO BURIAL.

STRAY/HAY BALES SHALL BE INSTALLED WHERE SPECIFIED ON THE PLANS IN A SINGLE ROW WITH THE ENDS OF ADJACENT BALES TIGHTLY ABUTTING ONE ANOTHER. ALL BALES SHALL BE EITHER WIRE-BOUND OR STRING-TIED. THE BARRIER SHALL BE ENTRENCHED AND BACKFILLED TO A DEPTY OF AT LEAST 4 INCHES, AND THE BALES SHALL BE SECURED WITH AT LEAST TWO WOODEN STAKES OR STEEL REBAR PER BALE. STAKES SHALL BE DRIVEN IN A DIRECTION TO PUSH THE BALES TOGETHER. GAPS BETWEEN BALES SHALL BE CHINKED WITH HAY.

EROSION CONTROL MIX BERMS ARE LINEAR BARRIERS COMPOSED OF EROSION CONTROL MIX AS SPECIFIED ABOVE. THE BERM MUST BE A MINIMUM OF 12 INCHES TALL AND 24 INCHES WIDE AT THE BASE IF UPHILL SLOPES ARE LESS THAN 5%. STEEPER SLOPES OR SLOPES GREATER THAN 20 FEET LONG MAY REQUIRE A LARGER WIDTH BERM. EROSION CONTROL MIX BERMS AT THE BASE OF A LONG OR STEEP SLOPE MAY ALSO REQUIRE A FILTER FENCE TO BE INSTALLED ON THE DOWNHILL SIDE OF THE BERM TO PROVIDE ADDITIONAL STABILIZATION AGAINST HIGH RUNOFF FLOWS.

CONTINUOUS CONTAINED BERMS, WHICH ARE ALSO REFERRED TO AS A FILTER SOCK, PROVIDES ADDITIONAL STABILITY TO AN EROSION CONTROL MIX BERM AND SHOULD BE USED IN FROZEN GROUND CONDITIONS OR IN AREAS THAT RECEIVE CONCENTRATED FLOW.

SEDIMENT BARRIERS SHOULD BE INSTALLED DOWNGRADIENT OF SOIL OR SEDIMENT STOCKPILES AND STORMWATER PREVENTED RUNNING ONTO THE STOCKPILE. SEDIMENT BARRIERS SHALL BE INSPECTED AFTER ANY SIGNIFICANT RAINFALL EVENT AND REPAIRED IMMEDIATELY IF THERE ARE ANY SIGNS OF EROSION OR SEDIMENTATION BELOW THE BARRIERS. IF THERE ARE SIGNS OF UNDERCUTTING AT THE CENTER OR EDGES OF THE BARRIER, OR IF LARGE VOLUMES OF WATER ARE IMPOUNDED BEHIND THE BARRIER, IT MAY BE NECESSARY TO REPLACE THE BARRIER WITH A TEMPORARY STONE CHECK DAM. SEDIMENT SHALL BE REMOVED ONCE IT REACHES HALF THE BARRIER HEIGHT. AFTER THE BARRIER IS REMOVED, ANY REMAINING SILT SHALL EITHER BE REMOVED OR GRADED TO CONFORM WITH THE EXISTING TOPOGRAPHY AND VEGETATED.

4. TEMPORARY CHECK DAMS

STONE CHECK DAMS SHALL BE INSTALLED IN SWALES OR DRAINAGE DITCHES TO REDUCE STORMWATER VELOCITIES AS SHOWN ON THE PLANS. STONE CHECK DAMS ARE NOT EFFECTIVE IN REMOVING SEDIMENT AND SHOULD BE USED IN CONJUNCTION WITH SEDIMENT BARRIERS IDENTIFIED ABOVE. TEMPORARY CHECK DAMS MAY BE LEFT IN PLACE PERMANENTLY IN MOST CASES. CHECK DAMS SHOULD BE NO HIGHER THAN 24 INCHES, AND THE CENTER OF THE CHECK DAM MUST BE AT LEAST 6 INCHES LOWER THAN THE OUTSIDE EDGES. CHECK DAMS SHOULD BE SPACED SUCH THAT THE CREST OF THE DOWNSTREAM CHECK DAM IS AT THE SAME ELEVATION AS THE TOE OF THE UPSTREAM CHECK DAM. CHECK DAMS IN A DRAINAGE DITCH OR WATERWAY SHOULD BE INSTALLED PRIOR TO DIRECTING RUNOFF TO THEM.

5. STORM DRAIN INLET PROTECTION

STORM DRAIN INLETS THAT ARE MADE OPERATIONAL BEFORE THEIR DRAINAGE AREA IS STABILIZED SHALL BE PROTECTED WITH A FILTER UNTIL THE DRAINAGE AREA IS EITHER PAVED OR STABILIZED WITH 95% VEGETATIVE GROWTH. THE FOLLOWING ARE ACCEPTABLE BMPS ASSOCIATED WITH STORM DRAIN INLET PROTECTION:

HAY BALE OR SILT FENCE INLET STRUCTURE CONSISTS OF HAY BALES OR SILT FENCE CONFIGURED AROUND A CATCH BASIN INLET FRAME AND INSTALLED ACCORDING TO THE METHODS OUTLINED ABOVE. THIS METHOD IS SUITABLE FOR OPEN PIPE (CULVERT) INLETS, FIELD INLETS OR ROAD INLETS THAT HAVE NOT YET BEEN PAVED.

MANUFACTURED SEDIMENT FILTERS ARE THE PREFERRED METHOD FOR PROTECTING CATCH BASIN INLETS IN PAVED OR GRAVEL ROADWAYS. THE FILTERS TYPICALLY CONSIST OF A FABRIC OR OTHER PERVIOUS MATERIAL THAT IS PLACED ABOVE OR BELOW THE GRATE THAT TRAPS SEDIMENT ON THE SURFACE AND ALLOWS WATER TO FLOW THROUGH THE GRATE. CONSIDERATIONS SUCH AS WEATHER CONDITIONS, SLOPES, TRIBUTARY WATERSHED AREA AND EXPECTED SEDIMENT ACCUMULATION SHOULD BE FACTORED INTO MAKING A DECISION ON ANY PARTICULAR PRODUCT, AND THE MANUFACTURER'S RECOMMENDATIONS ON INSTALLATION AND MAINTENANCE SHALL BE STRICTLY ADHERED TO.

6. STABILIZED CONSTRUCTION ENTRANCE/EXIT

TO REDUCE THE TRACKING OF SEDIMENT ONTO ROADWAYS, A STABILIZED CONSTRUCTION EXIT SHALL BE INSTALLED AT ALL POINTS OF EGRESS WHERE VEHICLES MAY TRAVEL FROM THE PROJECT SITE TO A PUBLIC ROAD OR OTHER PAVED AREA. THE STONE PAD SHALL CONSIST OF A MINIMUM 6-INCH DEPTH OF 2-3 INCH CRUSHED STONE, AND SHALL BE PLACED ON A GEOTEXTILE FABRIC. THE PAD SHALL EXTEND AT LEAST 50 FEET INTO THE PROJECT SITE AND BE A MINIMUM OF 10 FEET WIDE. THE EXIT SHALL BE MAINTAINED IN A CONDITION THAT WILL PREVENT TRACKING OF SEDIMENT ONTO PUBLIC RIGHTS-OF-WAY, AND THE CONTRACTOR SHALL SWEEP OR WASH PAVEMENT AT EXITS THAT HAVE EXPERIENCED ANY MUD-TRACKING. MAINTAIN THE PAD UNTIL ALL DISTURBED AREAS ARE STABILIZED.

7. DUST CONTROL

THE CONTRACTOR IS RESPONSIBLE FOR CONTROLLING DUST ON THE PROJECT SITE AND ON ADJACENT ROADWAYS. EXPOSED SOIL SURFACES SHALL BE MOISTENED PERIODICALLY WITH ADEQUATE WATER TO CONTROL DUST. GRAVEL SURFACES SHALL EITHER BE TREATED WITH AN APPLICATION OF CALCIUM CHLORIDE OR COVERED WITH CRUSHED STONE IF DUST CONTROL BECOMES DIFFICULT WITH NORMAL WATER APPLICATIONS.

8. LAND GRADING AND SLOPE PREPARATION

GRADING SHALL BE PLANNED SO AS TO MINIMIZE THE LENGTH OF TIME BETWEEN INITIAL SOIL EXPOSURE AND FINAL GRADING. ON LARGE PROJECTS THIS SHOULD BE ACCOMPLISHED BY PHASING THE OPERATION AND COMPLETING THE FIRST PHASE UP TO FINAL GRADING AND SEEDING BEFORE STARTING THE NEXT PHASE. ANY EXPOSED AREA THAT WILL NOT BE FINISH GRADED WITHIN 14 DAYS SHALL BE TREATED WITH MULCH OR PLANTED WITH TEMPORARY VEGETATION. PROVISIONS SHALL BE MADE TO SAFELY CONVEY SURFACE RUNOFF TO STORM DRAINS, PROTECTED OUTLETS OR TO STABLE WATER COURSES TO ENSURE THAT SURFACE RUNOFF WILL NOT DAMAGE SLOPES OR OTHER GRADED AREAS. CUT AND FILL SLOPES THAT ARE TO BE STABILIZED WITH GRASS SHALL NOT BE STEEPER THAN 2:1. AREAS TO BE FILLED SHALL BE CLEARED, GRUBBED AND STRIPPED OF TOPSOIL TO REMOVE TREES, VEGETATION, ROOTS OR OTHER OBJECTIONABLE MATERIALS. AREAS SHALL BE SCARIFIED TO A MINIMUM DEPTH OF 3 INCHES PRIOR TO PLACEMENT OF TOPSOIL. ALL FILLS SHALL BE COMPACTED AS REQUIRED TO REDUCE EROSION, SLIPPAGE, SETTLEMENT, SUBSIDENCE OR OTHER RELATED PROBLEMS. FILL INTENDED TO SUPPORT BUILDINGS, STRUCTURES AND CONDUITS, ETC. SHALL BE COMPACTED IN ACCORDANCE WITH LOCAL REQUIREMENTS OR CODES. ALL FILLS SHALL BE PLACED AND COMPACTED IN LAYERS NOT TO EXCEED 8 INCHES IN THICKNESS. FILL MATERIAL SHALL BE FREE OF STUMPS, BUILDING DEBRIS AND OTHER OBJECTIONABLE MATERIALS THAT WOULD INTERFERE WITH OR PREVENT CONSTRUCTION OF SATISFACTORY LIFTS. FROZEN MATERIAL OR SOFT, MUCKY OR HIGHLY COMPRESSIBLE MATERIALS SHALL NOT BE INCORPORATED INTO FILL SLOPES OR STRUCTURAL FILLS. FILL SHALL NOT BE PLACED ON A FROZEN FOUNDATION. SEEPS OR SPRINGS ENCOUNTERED DURING CONSTRUCTION SHALL BE HANDLED APPROPRIATELY. ALL GRADED AREAS SHALL BE PERMANENTLY STABILIZED IMMEDIATELY FOLLOWING FINISHED GRADING.

9. TOPSOIL

IF POSSIBLE, TOPSOIL SHALL BE STOCKPILED ON THE PROJECT SITE AND REUSED. HIGH QUALITY TOPSOIL SHALL BE FRIABLE AND LOAMY (LOAM, SANDY LOAM, SILT LOAM, SANDY CLAY LOAM, CLAY LOAM), AND SHALL BE FREE OF DEBRIS, TRASH, STUMPS, ROCKS, ROOTS AND NOXIOUS WEEDS. AFTER THE AREAS TO BE TOPSOILED HAVE BEEN BROUGHT TO GRADE, AND IMMEDIATELY PRIOR TO SPREADING THE TOPSOIL, THE SUBGRADE SHALL BE LOOSENED BY SCARIFYING TO A DEPTH OF AT LEAST 2 INCHES TO ENSURE BONDING WITH SUBSOIL. THE TOPSOIL SHALL BE UNIFORMLY DISTRIBUTED TO A MINIMUM COMPACTED DEPTH OF 4 INCHES. ANY IRREGULARITIES IN THE SURFACE RESULTING FROM TOPSOILING OR OTHER OPERATIONS SHALL BE CORRECTED IN ORDER TO PREVENT THE FORMATION OF DEPRESSIONS OR WATER POCKETS. IT IS NECESSARY TO COMPACT THE TOPSOIL ENOUGH TO ENSURE GOOD CONTACT WITH THE UNDERLYING SOIL, BUT UNDUE COMPACTION IS TO BE AVOIDED.

10. PERMANENT SOIL STABILIZATION

IF THE AREA WILL NOT BE WORKED FOR MORE THAN ONE YEAR OR HAS BEEN BROUGHT TO FINAL GRADE, THEN PERMANENTLY STABILIZE THE AREA WITHIN 7 DAYS BY PLANTING VEGETATION, SEEDING, SOD, OR THROUGH THE USE OF PERMANENT MULCH, OR RIPRAP, OR ROAD SUB-BASE. IF USING VEGETATION FOR STABILIZATION, SELECT THE PROPER VEGETATION FOR THE LIGHT, MOISTURE, AND SOIL CONDITIONS; AMEND AREAS OF DISTURBED SUBSOILS WITH TOPSOIL, COMPOST, OR FERTILIZERS; PROTECT SEEDED AREAS WITH MULCH OR, IF NECESSARY, EROSION CONTROL BLANKETS; AND SCHEDULE SODDING, PLANTING, AND SEEDING SO TO AVOID DIE-OFF FROM SUMMER DROUGHT AND FALL FROSTS. NEWLY SEEDED OR SODDED AREAS MUST BE PROTECTED FROM VEHICLE TRAFFIC, EXCESSIVE PEDESTRIAN TRAFFIC, AND CONCENTRATED RUNOFF UNTIL THE VEGETATION IS WELL-ESTABLISHED WITH 90% COVER BY HEALTHY VEGETATION. IF NECESSARY, AREAS MUST BE REWORKED AND RESTABILIZED IF GERMINATION IS SPARSE, PLANT COVERAGE IS SPOTTY, OR TOPSOIL EROSION IS EVIDENT. ONE OR MORE OF THE FOLLOWING MAY APPLY TO A PARTICULAR SITE.

SEEDED AREAS: TO PREPARE THE SEEDBED, APPLY 10-20-20 FERTILIZER AT A RATE OF 800 POUNDS PER ACRE AND GROUND LIMESTONE AT A RATE OF 3 TONS PER ACRE. WORK THE FERTILIZER AND LIMESTONE INTO THE TOPSOIL TO A DEPTH OF 4 INCHES AND REMOVE ANY STONES, ROOTS OR OTHER VISIBLE DEBRIS. SELECT A SEED MIXTURE THAT IS APPROPRIATE FOR THE SOIL TYPE AND MOISTURE CONTENT AS FOUND AT THE SITE, AND FOR THE AMOUNT OF SUN EXPOSURE AND FOR LEVEL OF USE. REFER TO THE USDA SOIL CONSERVATION SERVICE OR THE LOCAL SOIL AND WATER CONSERVATION DISTRICT FOR APPROPRIATE SEED MIXTURES. APPLY SEED UNIFORMLY IN ACCORDANCE WITH SUPPLIER RECOMMENDATIONS AND IMMEDIATELY COVER WITH MULCH AS DESCRIBED IN THE TEMPORARY MULCHING SECTION OF THIS PLAN.

HYDROSEEDING SHALL BE DONE IN ACCORDANCE WITH SUPPLIERS RECOMMENDATIONS. FOR SEEDED AREAS TO BE PERMANENTLY STABILIZED, 90% OF THE DISTURBED SOIL SHALL BE COVERED WITH MATURE HEALTHY PLANTS WITH NO EVIDENCE OF WASHING OR RILLING OF THE TOPSOIL.

SOD STRIPS SHALL BE LAID AT RIGHT ANGLES TO DIRECTION OF SLOPE OR FLOW OF WATER STARTING AT LOWEST ELEVATION. JOINTS SHALL BE STAGGERED, AND ALL STRIPS SHALL BE ROLLED OR TAMPED INTO PLACE. ON SLOPES, SOD SHALL BE ANCHORED WITH STAPLES, WIRE OR PINS. IRRIGATE SODDED AREA IMMEDIATELY AFTER INSTALLATION. FOR SODDED AREAS TO BE PERMANENTLY STABILIZED, THE ROOTS OF THE SOD MUST BE COMPLETELY BOUND INTO THE UNDERLYING SOIL WITH NO SLUMPING OF THE SOD OR DIE-OFF.

PERMANENT MULCH IS A LONG TERM COVER THAT PROVIDES A GOOD BUFFER AROUND DISTURBED AREAS. THE EROSION CONTROL MIX SHALL CONSIST PRIMARILY OF ORGANIC MATERIAL AND MAY INCLUDE SHREDDED BARK, STUMP GRINDINGS OR COMPOSTED BARK. WOOD CHIPS, GROUND CONSTRUCTION DEBRIS, REPROCESSED WOOD PRODUCTS OR BARK CHIPS ARE NOT ACCEPTABLE. THE EROSION CONTROL MIX SHALL CONTAIN A WELL-GRADED MIXTURE OF PARTICLE SIZES AND MAY CONTAIN ROCKS LESS THAN 4 INCHES IN DIAMETER. EROSION CONTROL MIX MUST BE FREE OF REFUSE, PHYSICAL CONTAMINANTS AND MATERIAL TOXIC TO PLANT GROWTH.

RIPRAP STONE SHALL CONSIST OF SUB-ANGULAR FIELD STONE OR ROUGH UNEVEN QUARRY STONE OF APPROXIMATELY RECTANGULAR SHAPE. THE DEPTH OF STONE SHALL BE A MINIMUM OF 2.2 TIMES THE MAXIMUM STONE DIAMETER. A GRAVEL OR GEOTEXTILE FILTER BLANKET SHALL BE PLACED BETWEEN THE RIPRAP AND UNDERLYING SOIL SURFACE. GRAVEL FILTER BLANKETS SHALL MEET MDOT TYPE-C UNDERDRAIN MATERIAL SPECIFICATIONS AND BE AT LEAST 6 INCHES THICK. GEOTEXTILE FILTER BLANKETS SHALL BE SPECIFIED BASED ON SITE CONDITIONS. RIPRAP SLOPES SHALL BE TOED INTO THE BASE OF THE EMBANKMENT BY EXCAVATING A TRENCH AT THE BOTTOM OF THE SLOPE AND INSTALLING A STABLE BASE OF RIPRAP TO GRADE.

DITCHES, CHANNELS AND SWALES ARE CONSIDERED PERMANENTLY STABILIZED WHEN THE CHANNEL HAS 90% COVER OF HEALTHY VEGETATION WITH A WELL GRADED RIPRAP LINING, EROSION CONTROL BLANKET, OR WITH ANOTHER NON-EROSIVE LINING SUCH AS CONCRETE OR ASPHALT PAVEMENT. THERE MUST BE NO EVIDENCE OF SLUMPING OF THE CHANNEL LINING, UNDERCUTTING OF THE BANKS, OR DOWNCUTTING OF THE CHANNEL.

11. STORMWATER CHANNELS

EACH CHANNEL SHOULD BE CONSTRUCTED IN SECTIONS SO THAT THE SECTION'S GRADING, SHAPING, AND INSTALLATION OF THE PERMANENT LINING CAN BE COMPLETED THE SAME DAY. IF A CHANNEL'S FINAL GRADING OR LINING INSTALLATION MUST BE DELAYED, THEN DIVERSION BERMS MUST BE USED TO DIVERT STORMWATER AWAY FROM THE CHANNEL, PROPERLY-SPACED CHECK DAMS MUST BE INSTALLED IN THE CHANNEL TO SLOW THE WATER VELOCITY, AND A TEMPORARY LINING INSTALLED ALONG THE CHANNEL TO PREVENT SCOURING.

WINTER EROSION AND SEDIMENTATION CONTROL NOTES:

THE WINTER CONSTRUCTION PERIOD TYPICALLY BEGINS IN EARLY NOVEMBER AND ENDS IN MID APRIL. IF A CONSTRUCTION SITE IS NOT STABILIZED WITH PAVEMENT, A ROAD GRAVEL BASE, 75% MATURE VEGETATION COVER OR RIPRAP BY NOVEMBER 15 THEN THE SITE NEEDS TO BE PROTECTED WITH OVER-WINTER STABILIZATION. WINTER EXCAVATION AND EARTHWORK SHALL BE COMPLETED SUCH THAT NO MORE THAN 1 ACRE OF THE SITE IS WITHOUT STABILIZATION AT ANY ONE TIME. LIMIT THE EXPOSED AREA TO THOSE AREAS IN WHICH WORK IS TO OCCUR DURING THE FOLLOWING 15 DAYS AND THAT CAN BE MULCHED IN ONE DAY PRIOR TO ANY SNOW EVENT. AN AREA SHALL BE CONSIDERED DENUDED UNTIL THE SUBBASE GRAVEL IS INSTALLED IN THE ROADWAY AREAS OR THE AREAS OF FUTURE LOAM AND SEED HAVE BEEN LOAMED, SEEDED AND MULCHED. A COVER OF EROSION CONTROL MIX IS THE PREFERRED TEMPORARY MULCH DURING WINTER CONDITIONS.

1. NATURAL RESOURCE PROTECTION

ANY AREAS WITHIN 75 FEET FROM ANY REGULATED NATURAL RESOURCES, IF NOT STABILIZED WITH A MINIMUM OF 75% MATURE VEGETATION CATCH, SHALL BE MULCHED BY DECEMBER 1 AND ANCHORED WITH PLASTIC NETTING OR PROTECTED WITH AN EROSION CONTROL COVER. DURING WINTER CONSTRUCTION, A DOUBLE ROW OF SEDIMENT BARRIERS (FOR EXAMPLE, SILT FENCE BACKED WITH HAY BALES OR EROSION CONTROL MIX) WILL BE PLACED BETWEEN ANY REGULATED NATURAL RESOURCE AND THE DISTURBED AREA. PROJECTS CROSSING THE REGULATED NATURAL RESOURCE SHALL BE PROTECTED A MINIMUM DISTANCE OF 100 FEET ON EITHER SIDE FROM THE RESOURCE. EXISTING PROJECTS NOT STABILIZED BY DECEMBER 1 SHALL BE PROTECTED WITH THE SECOND LINE OF SEDIMENT BARRIER TO ENSURE FUNCTIONALITY DURING THE SPRING THAW AND RAINS.

2. SEDIMENT BARRIERS

DURING FROZEN CONDITIONS, SEDIMENT BARRIERS MAY CONSIST OF EROSION CONTROL MIX BERMS OR ANY OTHER RECOGNIZED SEDIMENT BARRIERS AS FROZEN SOIL PREVENTS THE PROPER INSTALLATION OF HAY BALES OR SILT FENCES.

3. MULCHING

ALL AREAS SHALL BE CONSIDERED TO BE DENUDED UNTIL SEEDED AND MULCHED. HAY AND STRAW MULCH SHALL BE APPLIED AT A RATE OF 3 TONS PER ACRE (TWICE THE NORMAL ACCEPTED RATE) AND SHALL BE PROPERLY ANCHORED. EROSION CONTROL MIX MUST BE APPLIED WITH A MINIMUM 4 INCHES THICKNESS. MULCH SHALL NOT BE SPREAD ON TOP OF SNOW. SNOW MUST BE REMOVED DOWN TO A ONE-INCH DEPTH PRIOR TO APPLICATION. AFTER EACH DAY OF FINAL GRADING, THE AREA WILL BE PROPERTY STABILIZED WITH ANCHORED HAY OR STRAW OR EROSION CONTROL MATTING. AN AREA SHALL BE CONSIDERED TO HAVE BEEN STABILIZED WHEN EXPOSED SURFACES HAVE BEEN EITHER MULCHED OR ADEQUATELY ANCHORED SO THAT GROUND SURFACE IS NOT VISIBLE THROUGH THE MULCH. BETWEEN THE DATES OF NOVEMBER 1 AND APRIL 15, ALL MULCH SHALL BE ANCHORED BY EITHER MULCH NETTING, ASPHALT EMULSION CHEMICAL, TRACKING OR WOOD CELLULOSE FIBER. THE COVER WILL BE CONSIDERED SUFFICIENT WITH THE GROUND SURFACE IS NOT VISIBLE THROUGH THE MULCH. AFTER NOVEMBER 1ST, MULCH AND ANCHORING OF ALL EXPOSED SOIL SHALL OCCUR AT THE END OF EACH FINAL GRADING WORKDAY.

4. SOIL STOCKPILING

STOCKPILES OF SOIL OR SUBSOIL WILL BE MULCHED FOR OVER WINTER PROTECTION WITH HAY OR STRAW AT TWICE THE NORMAL RAT EOR WITH A FOUR-INCH LAYER OF EROSION CONTROL MIX. THIS WILL BE DONE WITHIN 24 HOURS OF STACKING AND RE-ESTABLISHED PRIOR TO ANY RAINFALL OR SNOWFALL. ANY SOIL STOCKPILE WILL NOT BE PLACED WITHIN 100 FEET FROM ANY REGULATED NATURAL RESOURCE.

5. SEEDING

BETWEEN THE DATES OF OCTOBER 15 AND APRIL 1, LOAM OR SEED WILL NOT BE REQUIRED. DURING PERIODS OF ABOVE FREEZING TEMPERATURES FINISHED AREAS SHALL BE FINE GRADED AND EITHER PROTECTED MULCH OR TEMPORARILY SEEDED AND MULCHED UNTIL SUCH TIME AS THE FINAL TREATMENT CAN BE APPLIED. IF THE DATE IS AFTER NOVEMBER 1 AND IF THE EXPOSED AREA HAS BEEN LOOMED, FINAL GRADED WITH A UNIFORM SURFACE, THEN THE AREA MAY BE DORMANT SEEDED AT A RATE OF 3 TIMES HIGHER THAN SPECIFIED FOR PERMANENT SEED AND THEN MULCHED. IF DORMANT SEEDING IS USED, ALL DISTURBED AREAS SHALL RECEIVE 4 INCHES OF LOAM AND SEED AT AN APPLICATION RATE OF 5 LBS PER 1,000 S.F. ALL AREAS INSUFFICIENTLY VEGETATED (LESS THAN 75%) IN THE SPRING SHALL BE REVEGETATED.

6. OVER-WINTER STABILIZATION OF DITCHES AND CHANNELS

ALL STONE-LINED DITCHES AND CHANNELS MUST BE CONSTRUCTED BY NOVEMBER 1. ALL GRASS-LINED DITCHES AND CHANNELS MUST BE CONSTRUCTED AND STABILIZED BY SEPTEMBER 1. IF A GRASS-LINED DITCH OR CHANNEL IS STABILIZED BY SEPTEMBER 1, THEN EITHER A SOD LINING SHALL BE INSTALLED PRIOR TO OCTOBER 1 OR THE DITCH MUST BE LINED WITH STONE RIPRAP BACKED BY AN APPROPRIATE GRAVEL BED OR GEOTEXTILE PRIOR TO NOVEMBER 1.

7. OVER-WINTER STABILIZATION OF DISTURBED SLOPES

ALL STONE-COVERED SLOPES MUST BE CONSTRUCTED AND STABILIZED BY NOVEMBER 15. ALL SLOPES TO BE VEGETATED MUST BE SEEDED AND MULCHED BY SEPTEMBER 1. ALL AREAS HAVING A GRADE STEEPER THAN 8% SHALL BE CONSIDERED A SLOPE. IF A SLOPE TO BE VEGETATED IS NOT STABILIZED BY SEPTEMBER 1, THEN THE SLOPE SHALL EITHER BE STABILIZED WITH TEMPORARY VEGETATION AND EROSION CONTROL MATS BY OCTOBER 1, SOD BY OCTOBER 1, EROSION CONTROL MIX BY NOVEMBER 1 OR STONE RIPRAP BY NOVEMBER 15. SEE APPLICABLE SECTIONS UNDER EROSION AND SEDIMENTATION CONTROL NOTES FOR PROPER INSTALLATION METHODS.

8. OVER-WINTER STABILIZATION OF DISTURBED SOILS

BY SEPTEMBER 15, ALL DISTURBED SOILS ON AREAS HAVING A SLOPE LESS THAN 15% MUST BE SEEDED AND MULCHED. IF THE DISTURBED AREAS ARE NOT STABILIZED BY THIS DATE, THEN THE AREA SHALL EITHER BE STABILIZED WITH TEMPORARY VEGETATION BY OCTOBER 1, SOD BY OCTOBER 1, OR MULCH BY NOVEMBER 15. SEE APPLICABLE SECTIONS UNDER EROSION AND SEDIMENTATION CONTROL NOTES FOR PROPER INSTALLATION METHODS.

9. MAINTENANCE

MAINTENANCE MEASURES SHALL BE APPLIED AS NEEDED DURING THE ENTIRE CONSTRUCTION SEASON. AFTER EACH RAINFALL, SNOW STORM OR PERIOD OF THAWING AND RUNOFF, THE SITE CONTRACTOR SHALL PERFORM A VISUAL INSPECTION OF ALL INSTALLED EROSION CONTROL MEASURES AND PERFORM REPAIRS AS NEEDED TO INSURE THEIR CONTINUOUS FUNCTION. FOLLOWING THE TEMPORARY AND/OR FINAL SEEDING AND MULCHING, THE CONTRACTOR SHALL, IN THE SPRING, INSPECT AND REPAIR ANY DAMAGES AND/OR BARE SPOTS. AN ESTABLISHED VEGETATIVE COVER MEANS A MINIMUM OF 85% OF AREAS VEGETATED WITH VIGOROUS GROWTH.

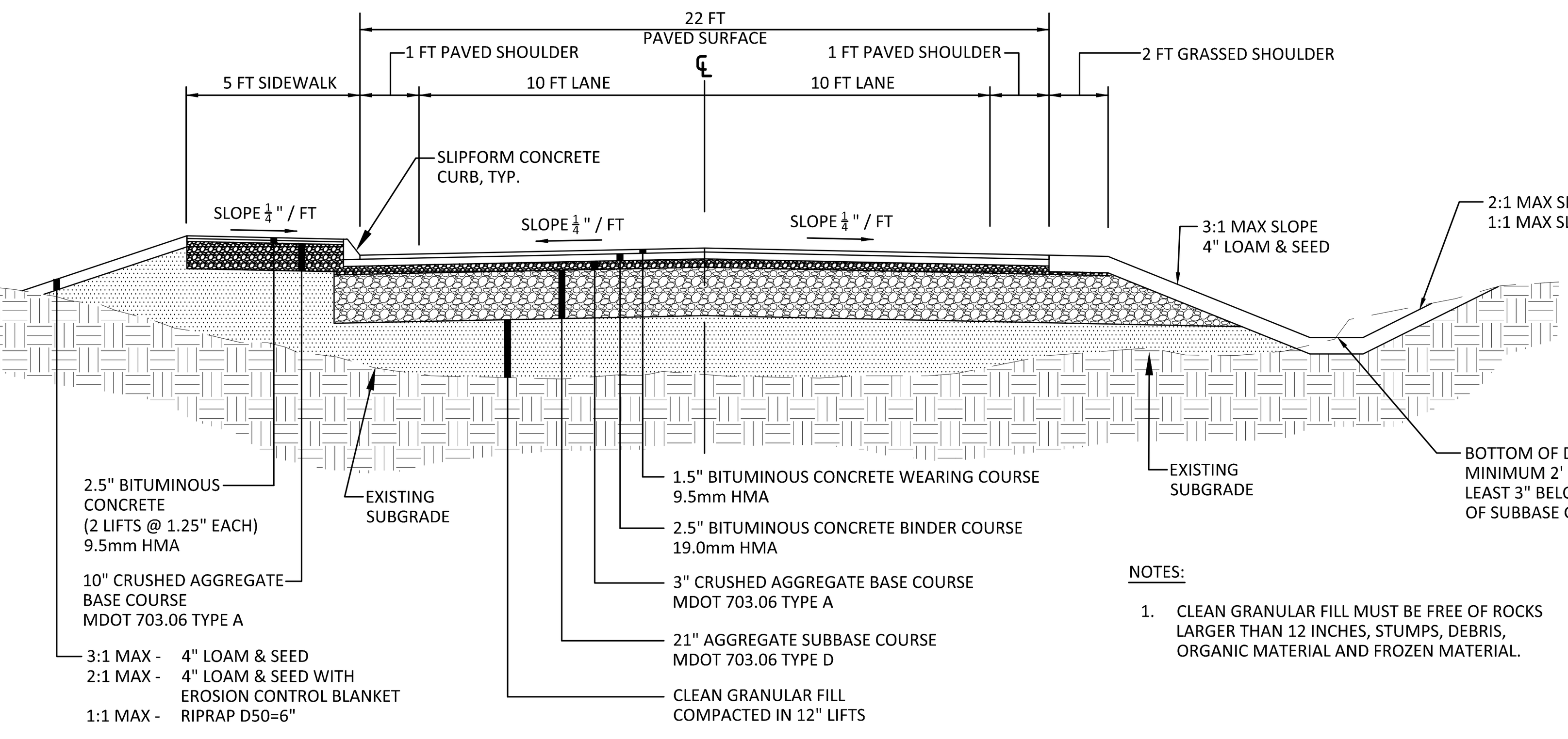

TYPICAL ROADWAY SECTION

NOT TO SCALE

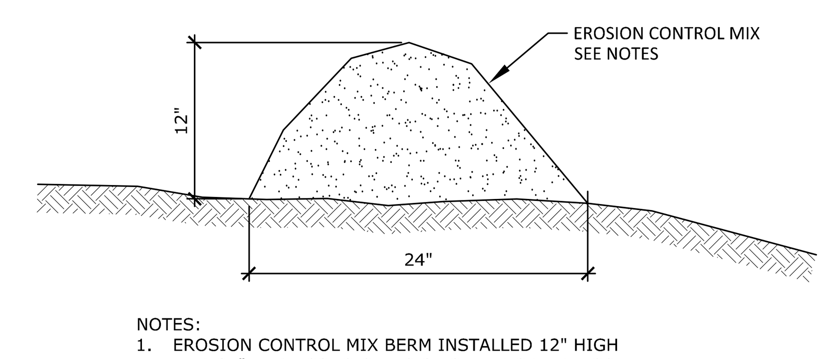

NOTES:
1. EROSION CONTROL MIX BERM INSTALLED 12" HIGH AND 24" WIDE CONSISTING OF STUMP GRINDINGS WITH NO ROCKS GREATER THAN 4" OR LARGE AMOUNTS OF FINES.

EROSION CONTROL MIX BERM

NOT TO SCALE

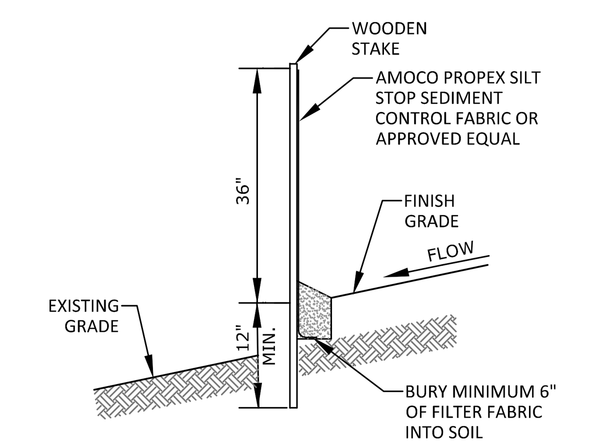

SEDIMENT FILTER FENCE

NOT TO SCALE

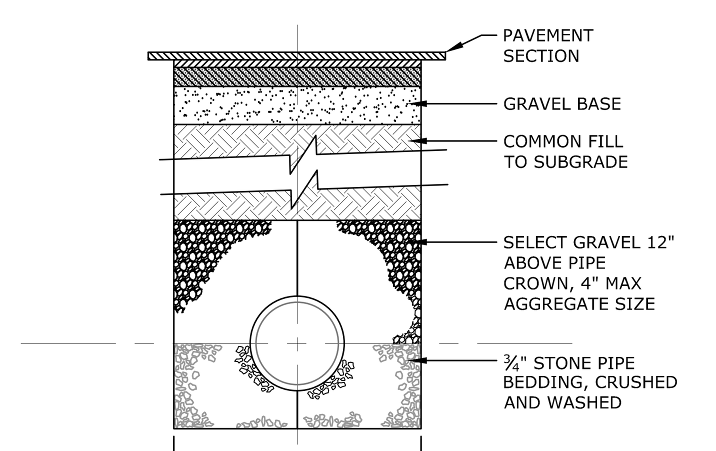

TYPICAL TRENCH SECTION

NOT TO SCALE

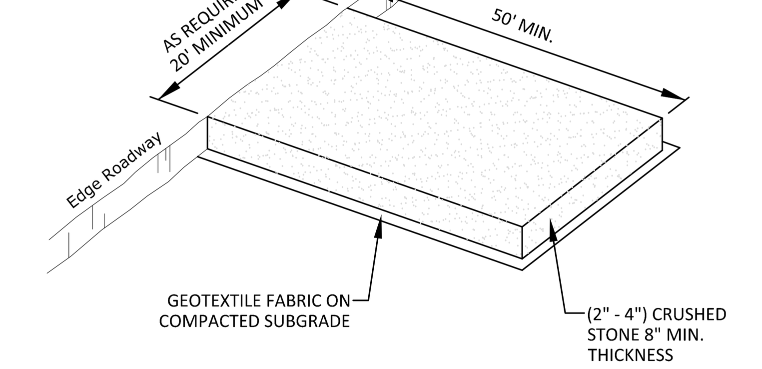

STABILIZED CONSTRUCTION ENTRANCE

NOT TO SCALE

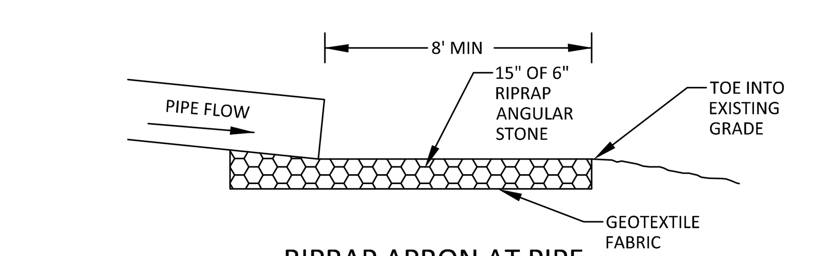

RIPRAP APRON AT PIPE

NOT TO SCALE

HOUSEKEEPING NOTES

1. SPILL PREVENTION: CONTROLS MUST BE USED TO PREVENT POLLUTANTS FROM CONSTRUCTION AND WASTE MATERIALS ON SITE TO ENTER STORMWATER, WHICH INCLUDES STORAGE PRACTICES TO MINIMIZE EXPOSURE OF THE MATERIALS TO STORMWATER. THE SITE CONTRACTOR OR OPERATOR MUST DEVELOP, AND IMPLEMENT AS NECESSARY, APPROPRIATE SPILL PREVENTION, CONTAINMENT, AND RESPONSE PLANNING MEASURES.

2. GROUNDWATER PROTECTION: DURING CONSTRUCTION, LIQUID PETROLEUM PRODUCTS AND OTHER HAZARDOUS MATERIALS WITH THE POTENTIAL TO CONTAMINATE GROUNDWATER MAY NOT BE STORED OR HANDLED IN AREAS OF THE SITE DRAINING TO AN INFILTRATION AREA. AN "INFILTRATION AREA" IS ANY AREA OF THE SITE THAT BY DESIGN OR AS A RESULT OF SOILS, TOPOGRAPHY AND OTHER RELEVANT FACTORS ACCUMULATES RUNOFF THAT INFILTRATES INTO THE SOIL. DIKES, BERMS, SUMPS, AND OTHER FORMS OF SECONDARY CONTAINMENT THAT PREVENT DISCHARGE TO GROUNDWATER MAY BE USED TO ISOLATE PORTIONS OF THE SITE FOR THE PURPOSES OF STORAGE AND HANDLING OF THESE MATERIALS. ANY PROJECT PROPOSING INFILTRATION OF STORMWATER MUST PROVIDE ADEQUATE PRE-TREATMENT OF STORMWATER PRIOR TO DISCHARGE OF STORMWATER TO THE INFILTRATION AREA, OR PROVIDE FOR TREATMENT WITHIN THE INFILTRATION AREA, IN ORDER TO PREVENT THE ACCUMULATION OF FINES, REDUCTION IN INFILTRATION RATE, AND CONSEQUENT FLOODING AND DESTABILIZATION.

3. FUGITIVE SEDIMENT AND DUST: ACTIONS MUST BE TAKEN TO ENSURE THAT ACTIVITIES DO NOT RESULT IN NOTICEABLE EROSION OF SOILS OR FUGITIVE DUST EMISSIONS DURING OR AFTER CONSTRUCTION. OIL MAY NOT BE USED FOR DUST CONTROL, BUT OTHER WATER ADDITIVES MAY BE CONSIDERED AS NEEDED. A STABILIZED CONSTRUCTION ENTRANCE (SCE) SHOULD BE INCLUDED TO MINIMIZE TRACKING OF MUD AND SEDIMENT. IF OFF-SITE TRACKING OCCURS, PUBLIC ROADS SHOULD BE SWEPT IMMEDIATELY AND NO LESS THAN ONCE A WEEK AND PRIOR TO SIGNIFICANT STORM EVENTS. OPERATIONS DURING DRY MONTHS, THAT EXPERIENCE FUGITIVE DUST PROBLEMS, SHOULD WET DOWN UNPAVED ACCESS ROADS ONCE A WEEK OR MORE FREQUENTLY AS NEEDED WITH A WATER ADDITIVE TO SUPPRESS FUGITIVE SEDIMENT AND DUST.

4. DEBRIS AND OTHER MATERIALS: MINIMIZE THE EXPOSURE OF CONSTRUCTION DEBRIS, BUILDING AND LANDSCAPING MATERIALS, TRASH, FERTILIZERS, PESTICIDES, HERBICIDES, DETERGENTS, SANITARY WASTE AND OTHER MATERIALS TO PRECIPITATION AND STORMWATER RUNOFF. THESE MATERIALS MUST BE PREVENTED FROM BECOMING A POLLUTANT SOURCE.

5. EXCAVATION DE-WATERING: EXCAVATION DE-WATERING IS THE REMOVAL OF WATER FROM TRENCHES, FOUNDATIONS, COFFER DAMS, PONDS, AND OTHER AREAS WITHIN THE CONSTRUCTION AREA THAT RETAIN WATER AFTER EXCAVATION. IN MOST CASES THE COLLECTED WATER IS HEAVILY SILTED AND HINDERS CORRECT AND SAFE CONSTRUCTION PRACTICES. THE COLLECTED WATER REMOVED FROM THE PONDED AREA, EITHER THROUGH GRAVITY OR PUMPING, MUST BE SPREAD THROUGH NATURAL WOODED BUFFERS OR REMOVED TO AREAS THAT ARE SPECIFICALLY DESIGNED TO COLLECT THE MAXIMUM AMOUNT OF SEDIMENT POSSIBLE, LIKE A COFFERDAM SEDIMENTATION BASIN. AVOID ALLOWING THE WATER TO FLOW OVER DISTURBED AREAS OF THE SITE. EQUIVALENT MEASURES MAY BE TAKEN IF APPROVED BY THE DEPARTMENT.

6. AUTHORIZED NON-STORMWATER DISCHARGES: IDENTIFY AND PREVENT CONTAMINATION BY NON-STORMWATER DISCHARGES. WHERE ALLOWED NON-STORMWATER DISCHARGES EXIST, THEY MUST BE IDENTIFIED AND STEPS SHOULD BE TAKEN TO ENSURE THE IMPLEMENTATION OF APPROPRIATE POLLUTION PREVENTION MEASURES FOR THE NON-STORMWATER COMPONENT(S) OF THE DISCHARGE. AUTHORIZED NON-STORMWATER DISCHARGES ARE:
(a) DISCHARGES FROM FIREFIGHTING ACTIVITY;
(b) FIRE HYDRANT FLUSHINGS;
(c) VEHICLE WASHWATER IF DETERGENTS ARE NOT USED AND WASHING IS LIMITED TO THE EXTERIOR OF VEHICLES (ENGINE, UNDERCARRIAGE AND TRANSMISSION WASHING IS PROHIBITED);
(d) DUST CONTROL RUNOFF IN ACCORDANCE WITH PERMIT CONDITIONS AND APPENDIX (C)(3);
(e) ROUTINE EXTERNAL BUILDING WASHDOWN, NOT INCLUDING SURFACE PAINT REMOVAL, THAT DOES NOT INVOLVE DETERGENTS;
(f) PAVEMENT WASHWATER (WHERE SPILLS/LEAKS OF TOXIC OR HAZARDOUS MATERIALS HAVE NOT OCCURRED, UNLESS ALL SPILLED MATERIAL HAD BEEN REMOVED) IF DETERGENTS ARE NOT USED;
(g) UNCONTAMINATED AIR CONDITIONING OR COMPRESSOR CONDENSATE;
(h) UNCONTAMINATED GROUNDWATER OR SPRING WATER;
(i) FOUNDATION OR FOOTER DRAIN-WATER WHERE FLOWS ARE NOT CONTAMINATED;
(j) UNCONTAMINATED EXCAVATION DEWATERING (SEE REQUIREMENTS IN APPENDIX C(5));
(k) POTABLE WATER SOURCES INCLUDING WATERLINE FLUSHINGS; AND
(l) LANDSCAPE IRRIGATION.

7. UNAUTHORIZED NON-STORMWATER DISCHARGES: APPROVAL FROM THE MDEP DOES NOT AUTHORIZE A DISCHARGE THAT IS MIXED WITH A SOURCE OF NON_STORMWATER, OTHER THAN THOSE DISCHARGES IN COMPLIANCE WITH SECTION 6 ABOVE. SPECIFICALLY, THE MDEP'S APPROVAL DOES NOT AUTHORIZE DISCHARGES OF THE FOLLOWING:
(a) WASTEWATER FROM THE WASHOUT OR CLEANOUT OF CONCRETE, STUCCO, PAINT, FORM RELEASE OILS, CURING COMPOUNDS OR OTHER CONSTRUCTION MATERIALS;
(b) FUELS, OILS OR OTHER POLLUTANTS USED IN VEHICLE AND EQUIPMENT OPERATION AND MAINTENANCE;
(c) SOAPS, SOLVENTS, OR DETERGENTS USED IN VEHICLE AND EQUIPMENT WASHING; AND
(d) TOXIC OR HAZARDOUS SUBSTANCES FROM A SPILL OR OTHER RELEASE.

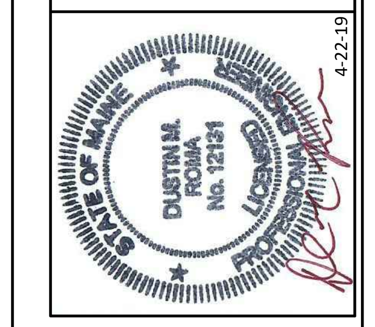

DM ROMA
CONSULTING ENGINEERS
P.O. BOX 1116
WINDHAM, ME 04062
(207) 310 - 0506

REV	DATE	BY	DESCRIPTION
A	4-22-19	DMR	ISSUED TO TOWN FOR PRELIMINARY REVIEW

DETAILS

WOODSIDE CONDOMINIUM RETIREMENT COMMUNITY
WINDHAM, MAINE

FOR:
WELD,LLC
PO BOX 1361
WINDHAM, MAINE 04062

17070
JOB NUMBER:

AS NOTED
SCALE:

4-22-2019
DATE:

SHEET 11 OF 14

D-1

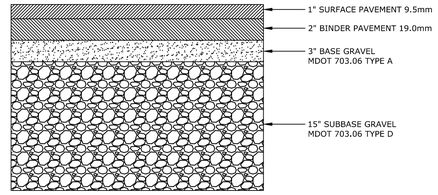

TYPICAL UNIT DRIVEWAY SECTION

NOT TO SCALE

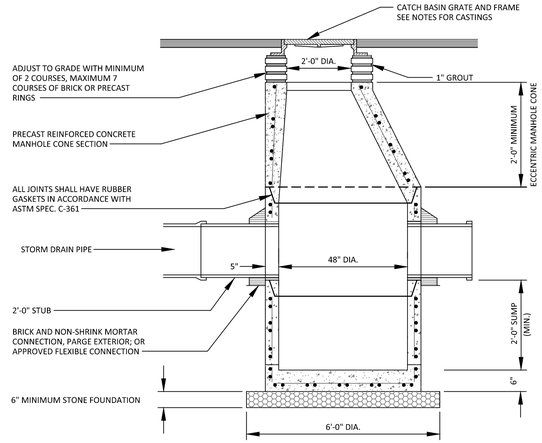

NOTES:

1. LARGER DIAMETER STRUCTURES MAY BE REQUIRED DUE TO SIZE OR GEOMETRY OF PIPE CONNECTIONS AT MANHOLE. WALL THICKNESS TO INCREASE BY 1" FOR EACH 1'-0" DIA. INCREASE. PROVIDE SHOP DRAWINGS.

2. DRAINAGE STRUCTURES TO BE DESIGNED FOR H-20 LOADING.

3. CAST IRON GRATES AND FRAMES SHALL BE EQUAL TO GENERAL FOUNDARIES, INC. PRODUCT NO. 12442 - 24"DIA. 4" FRAME HEIGHT HEAVY DUTY, BUILT UP TYPE FRAME, SLOTTED GRATE. SUBMIT CATALOG SHEETS TO ENGINEER FOR APPROVAL.

PRECAST CONCRETE CATCH BASIN STRUCTURE

NOT TO SCALE

CONCRETE THRUST BLOCK SIZE REQUIREMENTS				
		SQ. FT. OF BEARING ON UNDISTURBED SOIL		
FITTINGS		90°BENDS	45°BENDS	TEES AND PLUGS
PIPE SIZE	6"	4.0	2.0	3.0
	8"	8.0	4.0	6.0
	12"	15	9	12
	16"	26	14	19
	20"	40	22	28

BASED ON SOIL BEARING PRESSURE OF 2000PSF AND 100PSI LINE PRESSURE. COMPACT COURSE TO FINE SANDS AND CLAYS REQUIRE ENGINEERED BLOCKS. ENGINEERED BLOCKS WILL TYPICALLY REQUIRE REINFORCING STEEL OF #5 AT 12".

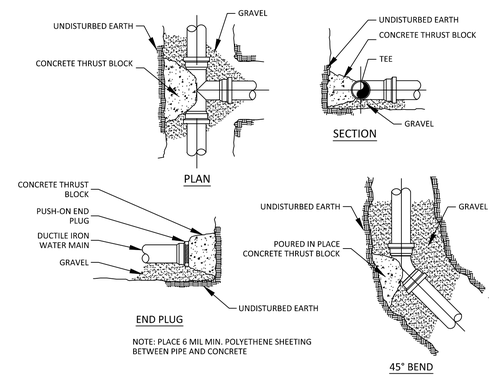

NOTE: PLACE 6 MIL MIN. POLYETHENE SHEETING BETWEEN PIPE AND CONCRETE

THRUST BLOCK DETAIL

NOT TO SCALE

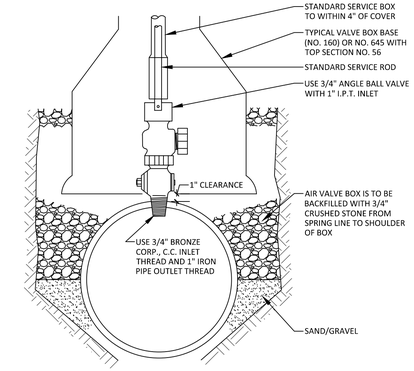

TYPICAL AIR VALVE (1")

NOT TO SCALE

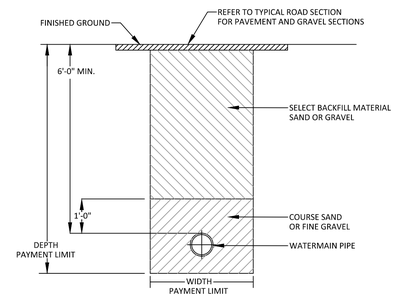

WATERMAIN TYPICAL TRENCH CROSS-SECTION

NOT TO SCALE

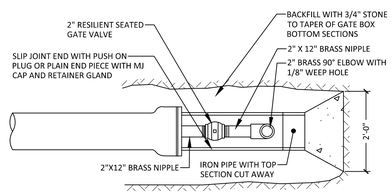

TOP VIEW

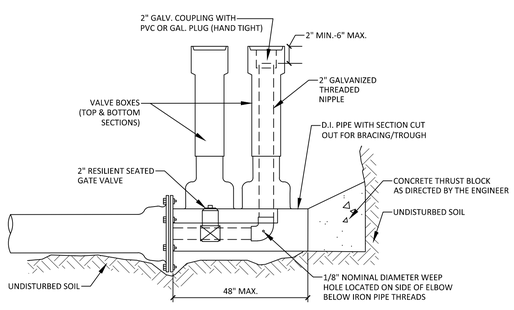

STANDARD 2" BLOW OFF

NOT TO SCALE

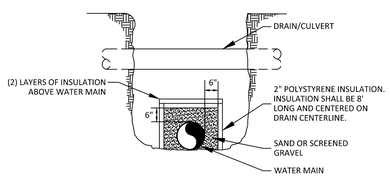

NOTES: INSULATION IS REQUIRED AT ALL DRAIN & CULVERT CROSSINGS THAT DO NOT PROVIDE A MINIMUM OF 18" OF VERTICAL SEPARATION

INSULATION DETAIL

NOT TO SCALE

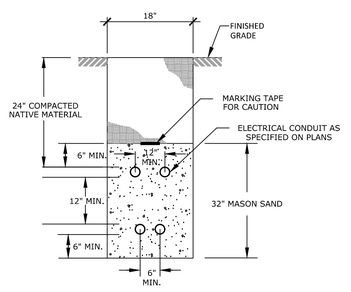

UTILITY TRENCH DETAIL

NOT TO SCALE

NOTES:

1. ALL CONDUITS SHALL BE 4" DIA. PVC SCH 40 EXCEPT FOR ROAD CROSSINGS SHALL BE PVC SCH 80
2. INSTALLATION SHOULD NOT ALLOW THE INTER-TWINING OF CABLES.
3. BEDDING AND BACKFILL SHALL BE FREE OF ROOTS, STUMPS AND OTHER DEBRIS.
4. COMMUNICATION CABLE AND POWER CABLE SHALL HAVE NO LESS THAN 12 INCHES OF RADIAL SEPARATION.

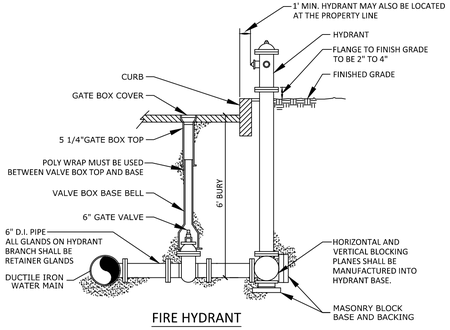

FIRE HYDRANT

NOT TO SCALE

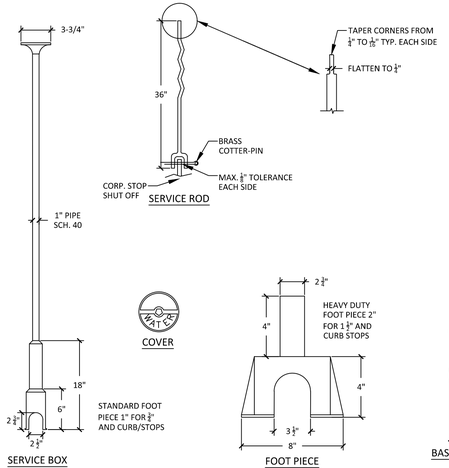

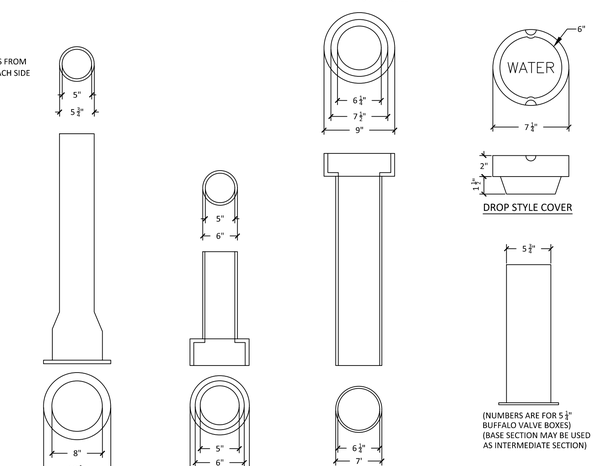

VALVE BOX & COVER

NOT TO SCALE

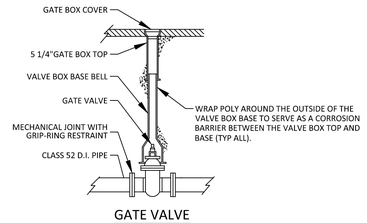

GATE VALVE

NOT TO SCALE

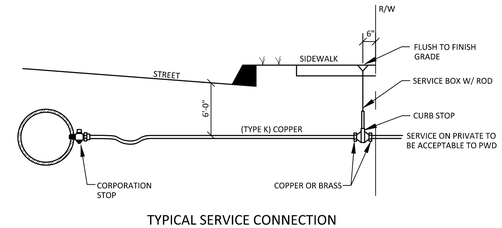

TYPICAL SERVICE CONNECTION

NOT TO SCALE

STATE OF MAINE
DUSTIN M. ROMA
ROMA
No. 12181
PROFESSIONAL ENGINEER
4-22-19

DM ROMA
CONSULTING ENGINEERS
P.O. BOX 1116
WINDHAM, ME 04062
(207) 310 - 0506

REV	DATE	BY	DESCRIPTION
A	4-22-19	DMR	ISSUED TO TOWN FOR PRELIMINARY REVIEW

DETAILS

WOODSIDE CONDOMINIUM RETIREMENT COMMUNITY
WINDHAM, MAINE

FOR:
WELD,LLC
PO BOX 1361
WINDHAM, MAINE 04062

17070
JOB NUMBER:

AS NOTED
SCALE:

4-22-2019
DATE:

TABLE 7.1 UNDERDRAIN 703.22 TYPE "B"	
SIEVE SIZE	% PASSING BY WEIGHT
1"	90-100
1/2"	75-100
#4	50-100
#20	15-80
#50	0-15
#200	0-5

TABLE 7.3 LOAMY COARSE SAND	
SIEVE SIZE	% PASSING BY WEIGHT
#10	85-100
#20	70-100
#60	15-40
#200	8-15
200 CLAY	<2.0

TABLE 7.4 SANDY LOAM	
SIEVE SIZE	% PASSING BY WEIGHT
#4	75-95
#10	60-90
#40	35-85
#200	20-70
200 CLAY	<2.0

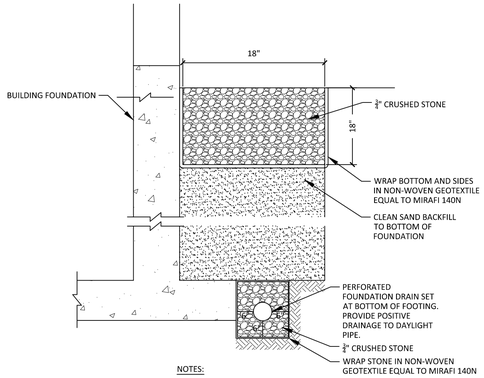

NOTES:

1. ALL NEW BUILDINGS REQUIRE ROOF DRIP EDGES

ROOF DRIP EDGE

NOT TO SCALE

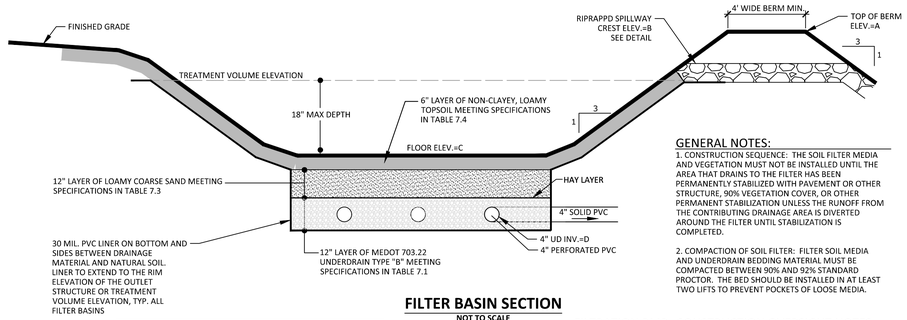

FILTER BASIN SECTION

NOT TO SCALE

GENERAL NOTES:

1. CONSTRUCTION SEQUENCE: THE SOIL FILTER MEDIA AND VEGETATION MUST NOT BE INSTALLED UNTIL THE AREA THAT DRAINS TO THE FILTER HAS BEEN PERMANENTLY STABILIZED WITH PAVEMENT OR OTHER STRUCTURE, 90% VEGETATION COVER, OR OTHER PERMANENT STABILIZATION UNLESS THE RUNOFF FROM THE CONTRIBUTING DRAINAGE AREA IS DIVERTED AROUND THE FILTER UNTIL STABILIZATION IS COMPLETED.

2. COMPACTION OF SOIL FILTER: FILTER SOIL MEDIA AND UNDERDRAIN BEDDING MATERIAL MUST BE COMPACTED BETWEEN 90% AND 92% STANDARD PROCTOR. THE BED SHOULD BE INSTALLED IN AT LEAST TWO LIFTS TO PREVENT POCKETS OF LOOSE MEDIA.

BIORETENTION CELL NOTES:

1. PLANTINGS WITHIN BIORETENTION CELLS SHALL BE TOLERANT OF WELL DRAINED SOILS AND FREQUENT INUNDATION. SEE *MAINE STORMWATER MANAGEMENT DESIGN MANUAL VOLUME 1 - APPENDIX A LANDSCAPE DESIGNS TO ENHANCE STORMWATER TREATMENT* FOR PLANTING RECOMMENDATIONS.

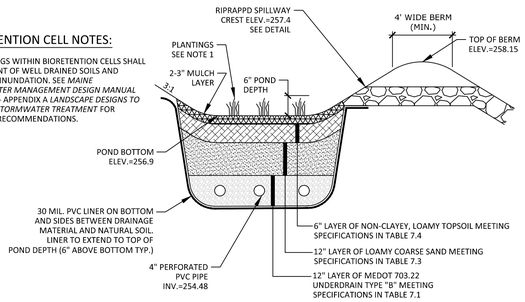

BIORETENTION CELL (BR-1)

NOT TO SCALE

FILTER BASIN DATA				
POND ID	A	B	C	D
FB-1	257.25	256.40	253.75	251.58
FB-2	245.25	244.20	242.00	239.83
FB-3	242.80	241.80	239.50	237.33
FB-4	251.50	250.25	248.40	246.23

FILTRATION BMPs CONSTRUCTION OVERSIGHT NOTES:

1. INSPECTION BY THE DESIGN ENGINEER OR SUITABLE THIRD PARTY WILL OCCUR AT A MINIMUM:
   A) AFTER THE PRELIMINARY CONSTRUCTION OF THE FILTER GRADES AND ONCE THE UNDERDRAIN PIPES ARE INSTALLED BUT NOT BACKFILLED.
   B) AFTER THE DRAINAGE LAYER IS CONSTRUCTED AND PRIOR TO THE INSTALLATION OF THE FILTER MEDIA.
   C) AFTER THE FILTER MEDIA HAS BEEN INSTALLED AND SEEDED.
   D) AFTER ONE YEAR TO INSPECT HEALTH OF THE VEGETATION AND MAKE CORRECTIONS.
   E)ALL THE MATERIAL USED FOR THE CONSTRUCTION OF THE FILTER BASIN MUST BE CONFIRMED AS SUITABLE BY THE DESIGN ENGINEER. TESTING MUST BE DONE BY A CERTIFIED LABORATORY TO SHOW THAT THEY ARE PASSING MDEP SPECIFICATIONS.

2. TESTING AND SUBMITTALS: THE CONTRACTOR SHALL IDENTIFY THE LOCATION OF THE SOURCE OF EACH COMPONENT OF THE FILTER MEDIA. ALL RESULTS OF FIELD AND LABORATORY TESTING SHALL BE SUBMITTED TO THE PROJECT ENGINEER FOR CONFIRMATION. THE CONTRACTOR SHALL:
   A) SELECT SAMPLES FOR SAMPLING OF EACH TYPE OF MATERIAL TO BE BLENDED FOR THE MIXED FILTER MEDIA AND SAMPLES OF THE UNDERDRAIN BEDDING MATERIAL. SAMPLES MUST BE A COMPOSITE OF THREE DIFFERENT LOCATIONS (GRABS) FROM THE STOCKPILE OR PIT FACE. SAMPLE SIZE REQUIRED WILL BE DETERMINED BY THE TESTING LABORATORY.
   B) PERFORM A SIEVE ANALYSIS CONFORMING TO STM C136 (STANDARD TEST METHOD FOR SIEVE ANALYSIS OF FINE AND COARSE AGGREGATES 1996A) ON EACH TYPE OF THE SAMPLE MATERIAL. THE RESULTING SOIL FILTER MEDIA MIXTURE MUST HAVE 8% TO 12% BY WEIGHT PASSING THE #200 SIEVE, A CLAY CONTENT OF LESS THAN 2% (DETERMINED BY HYDROMETER GRAIN SIZE ANALYSIS) AND HAVE 10% DRY WEIGHT OF ORGANIC MATTER.
   C) PERFORM A PERMIABILITY TEST ON THE SOIL FILTER MEDIA MIXTURE CONFORMING TO ASTM D2434 WITH THE MIXTURE COMPACTED TO 90-92% OF MAXIMUM DRY DENSITY BASED ON ASTM D698

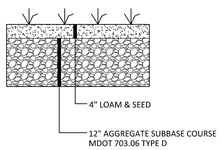

TYPICAL POND ACCESS ROAD SECTION

NOT TO SCALE

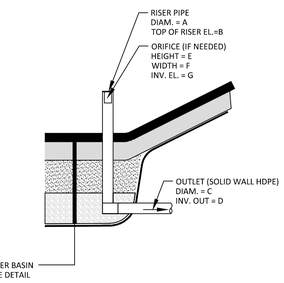

RISER PIPE DETAIL (FB-1, FB-2 & FB-3)

NOT TO SCALE

FILTER BASIN DATA							
POND ID	A	B	C	D	E	F	G
FB-1	4"	255.25	4"	251.58	N/A	N/A	N/A
FB-2	4"	243.10	4"	239.83	N/A	N/A	N/A
FB-3	8"	240.70	8"	237.33	N/A	N/A	N/A
FB-4	4"	250.15	4"	246.23	3"	4"	249.90

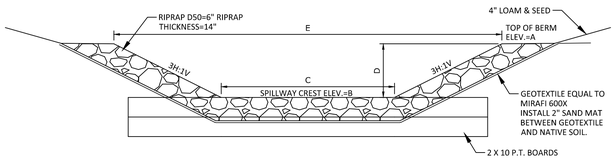

SPILLWAY DATA					
POND ID	A	B	C	D	E
FB-1	257.25	256.40	7'	0.85'	12.1'
FB-2	245.25	244.20	6'	1.05'	12.3'
FB-3	242.80	241.80	10'	1.00'	16.0'
FB-4	251.50	250.25	4'	1.25'	11.5'
BR-1	258.15	257.40	4'	0.75'	8.5'

RIPRAPPED SPILLWAY CROSS-SECTION

NOT TO SCALE

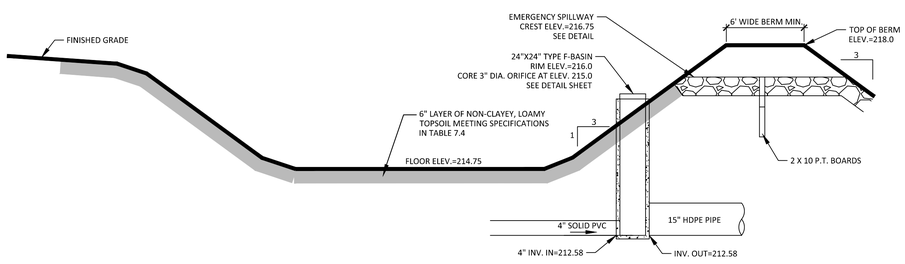

DETENTION BASIN 1 SECTION (DB-1)

NOT TO SCALE

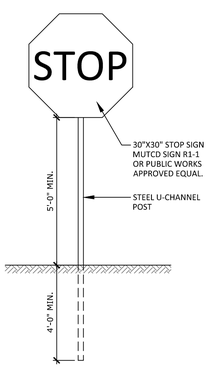

STOP SIGN INSTALLATION

NOT TO SCALE

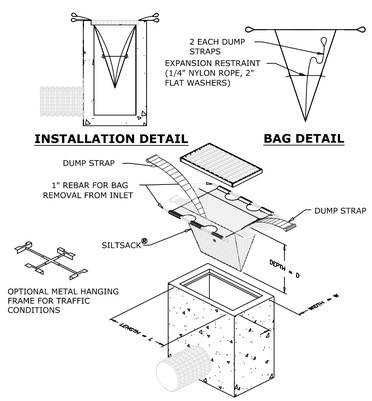

INLET PROTECTION (IP)

NOT TO SCALE

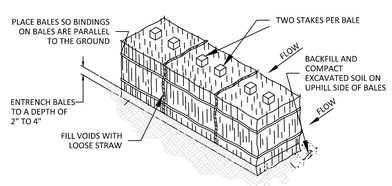

1. IDEALLY, BALES SHOULD BE ENTRENCHED 2 TO 4 INCHES AND TIGHTLY BUTTED TOGETHER. BALES CAN BE SUCCESSFULLY PLACED WITHOUT A TRENCH IF GOOD GROUND CONTACT IS MADE. REMOVE HEAVY BRUSH AND FILL ALL VOIDS WITH LOOSE STRAW.

2. BALES SHALL BE ONLY USED AS A TEMPORARY BARRIER AND FOR NO LONGER THAN 60 DAYS.

3. WHEN SEDIMENTATION DEPOSITS REACH WITHIN 3" OF THE TOP OF BALES, REMOVE SEDIMENTATION OR ADD ADDITIONAL BALES ON SEDIMENTATION DIRECTLY BEHIND FIRST ROW OF BALES AS DIRECTED BY THE ENGINEER.

4. UPON ESTABLISHMENT OF GROUND COVER ON DISTURBED AREAS AND WHEN DIRECTED BY THE ENGINEER, HAY BALES WILL BE RELOCATED AND USED AS MULCH. ANY SEDIMENTATION WILL BE THINLY SPREAD UPON ESTABLISHED GROUND COVER.

STAKED HAYBALES (HB)

NOT TO SCALE

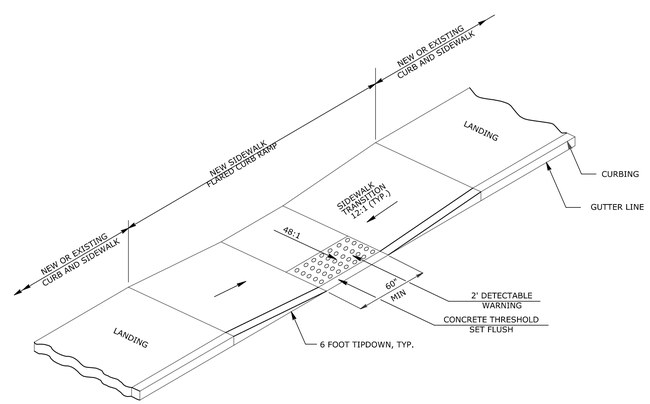

TYPICAL SIDEWALK RAMP DETAIL

NOT TO SCALE

STATE OF MAINE DUSTIN M. ROMA No. 12181 LICENSED PROFESSIONAL ENGINEER 4-22-19

DM ROMA
CONSULTING ENGINEERS
P.O. BOX 1116
WINDHAM, ME 04062
(207) 310 - 0506

REV	DATE	BY	DESCRIPTION
A	4-22-19	DMR	ISSUED TO TOWN FOR PRELIMINARY REVIEW

DETAILS

WOODSIDE CONDOMINIUM RETIREMENT COMMUNITY
WINDHAM, MAINE

FOR:
WELD,LLC
PO BOX 1361
WINDHAM, MAINE 04062

17070
JOB NUMBER:

AS NOTED
SCALE:

4-22-2019
DATE:

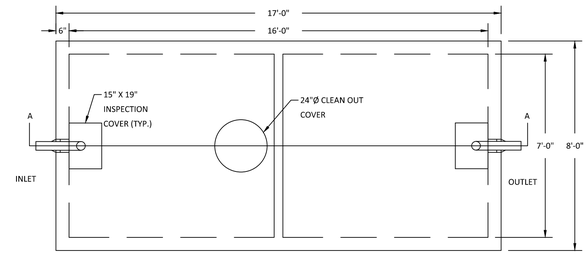

TOP VIEW

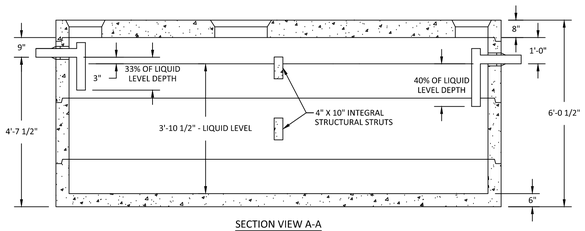

SECTION VIEW A-A

TANK NOTES:
1. CONCRETE TO BE 5,000 PSI AT 28 DAYS.
2. SHIPLAP JOINTS SEALED WITH A 2x1-1/4" STRIP OF ASPHALTIC BUTYL RUBBER.
3. TANK TO BE A 3,000 GAL. COMMERCIAL SINGLE SERIES SEPTIC TANK MODEL C-703 AS MANUFACTURED BY PRECAST CONCRETE PRODUCTS OF MAINE, INC. OR APPROVED EQUAL.

3,000 GALLON COMMERCIAL SEPTIC TANK

NOT TO SCALE

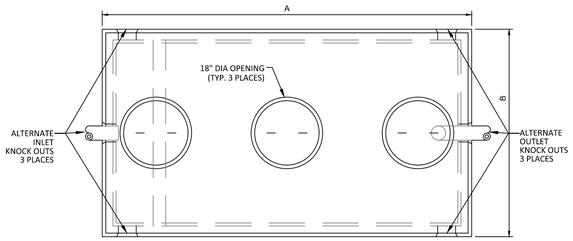

TOP VIEW

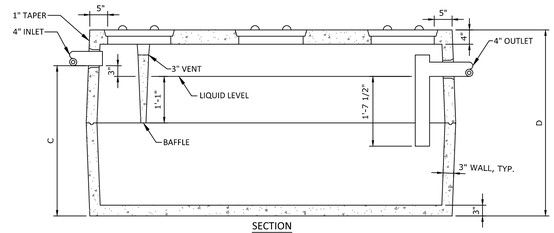

SECTION

TANK NOTES:
1. CONCRETE TO BE 4,000 PSI AT 28 DAYS.
2. THE INLET BAFFLE IS PRECAST AS ONE UNIT WITH THE TOP SECTION OF THE SEPTIC TANK.
3. TANKS REINFORCED WITH 6X6X10 G.A. WIRE.
4. KEYED JOINTS SEALED WITH ASPHALT SEALANT.
5. TANKS IN PAVED AREAS TO BE REINFORCED WITH WITH 1/2" REBAR SPACED 6" O.C. EACH WAY.
6. TANKS TO BE RESIDENTIAL SEPTIC TANKS AS MANUFACTURED BY PRECAST CONCRETE PRODUCTS OF MAINE, INC. OR APPROVED EQUAL.

SEPTIC TANK DIMENSIONS

SIZE	A	B	C	D
1,000 GAL.	8'-6"	4'-10"	55 1/2"	64"
1,500 GAL.	10'-6"	6'-4"	55"	64"
2,000 GAL.	10'-6"	6'-4"	65"	74"

RESIDENTIAL SEPTIC TANK

NOT TO SCALE

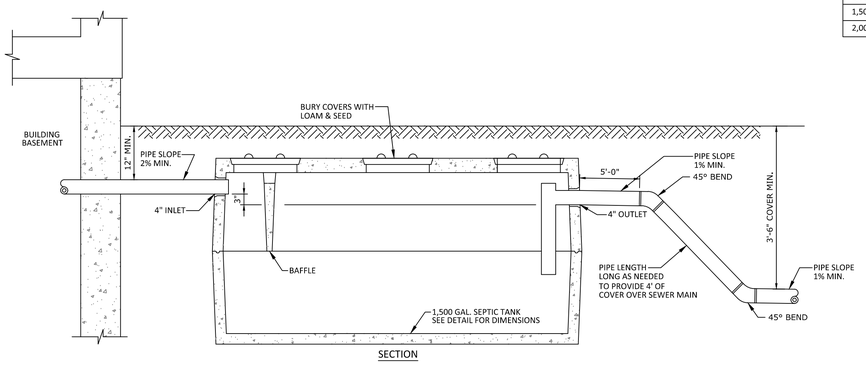

SECTION

SEWER SERVICE AND SEPTIC TANK DETAIL

NOT TO SCALE

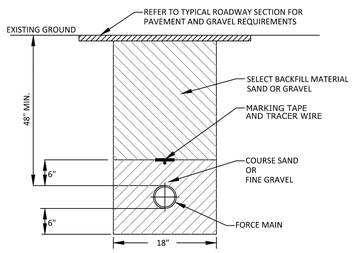

FORCE MAIN TYPICAL TRENCH CROSS-SECTION

NOT TO SCALE

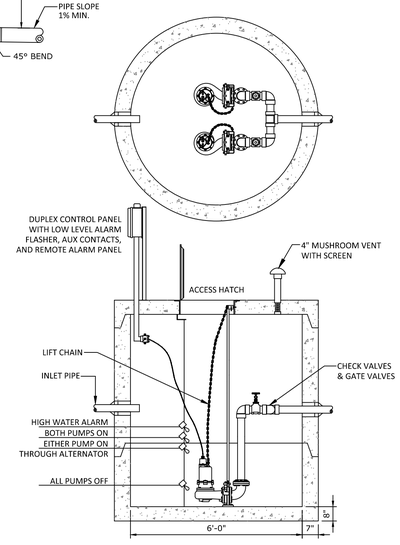

PUMP STATION DETAIL

NOT TO SCALE

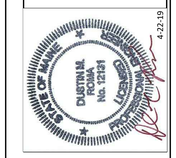

DM ROMA
CONSULTING ENGINEERS
P.O. BOX 1116
WINDHAM, ME 04062
(207) 310 - 0506

REV	DATE	BY	DESCRIPTION
A	4-22-19	DMR	ISSUED TO TOWN FOR PRELIMINARY REVIEW

DETAILS

WOODSIDE CONDOMINIUM RETIREMENT COMMUNITY
WINDHAM, MAINE

FOR:
WELD,LLC
PO BOX 1361
WINDHAM, MAINE 04062

17070
JOB NUMBER:

AS NOTED
SCALE:

4-22-2019
DATE:

SHEET 14 OF 14

D-4