DEPOT STREET RESIDENTIAL DEVELOPMENT

DEPOT STREET
WINDHAM, MAINE

CONSULTANTS

CIVIL ENGINEER	DM ROMA CONSULTING ENGINEERS
WETLAND SCIENTIST	MAINELY SOILS, LLC

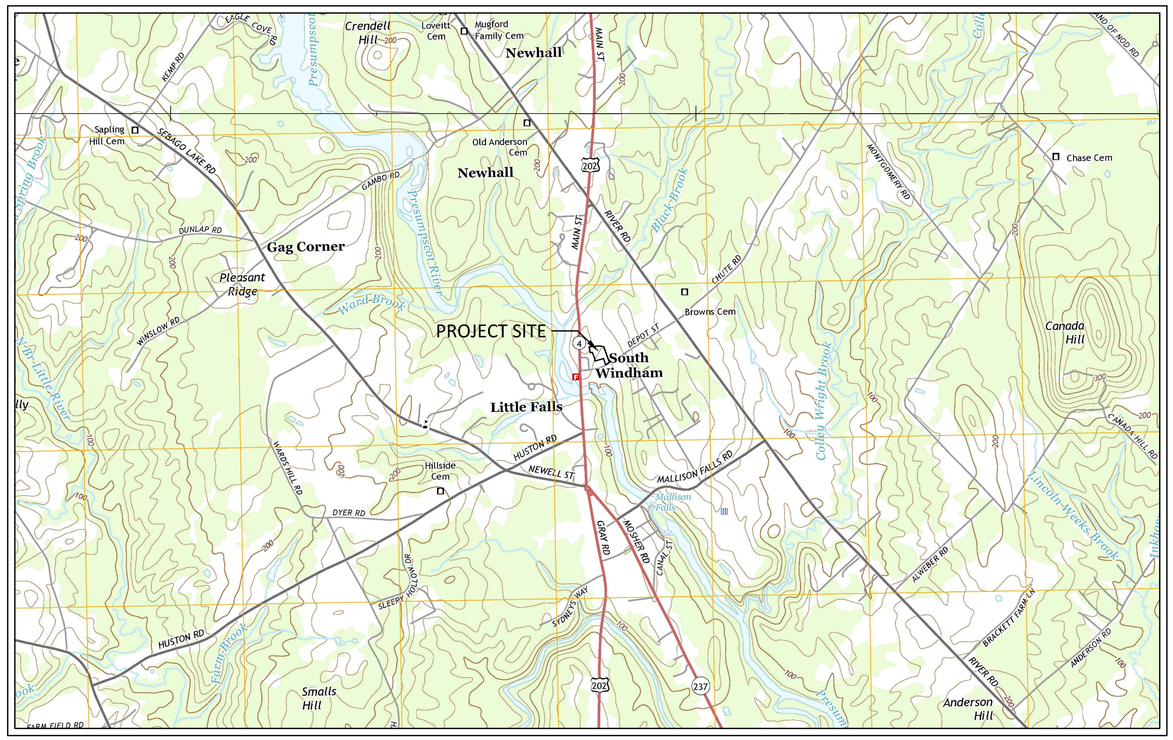

PROJECT VICINITY MAP

ISSUED FOR PRELIMINARY SUBDIVISION REVIEW - NOT FOR CONSTRUCTION

NOVEMBER 18, 2019

PREPARED BY:

DM ROMA
CONSULTING ENGINEERS
P.O. BOX 1116
WINDHAM, ME 04062
(207) 310 - 0506

APPLICANT:

MCL REALTY, LLC
PO BOX 1206
WINDHAM,MAINE 04062

DEPOT STREET RESIDENTIAL DEVELOPMENT

DRAWING SHEET INDEX

PAGE NO.	DESCRIPTION
1	TITLE SHEET
2	AMENDED PLAN - LITTLE FALLS INDUSTRIAL CONDOMINIUM PLAT
3	SUBDIVISION PLAN
4	SITE AND LANDSCAPING PLAN
5	GRADING AND UTILITY PLAN
6	DETAILS
7	DETAILS
8	DETAILS

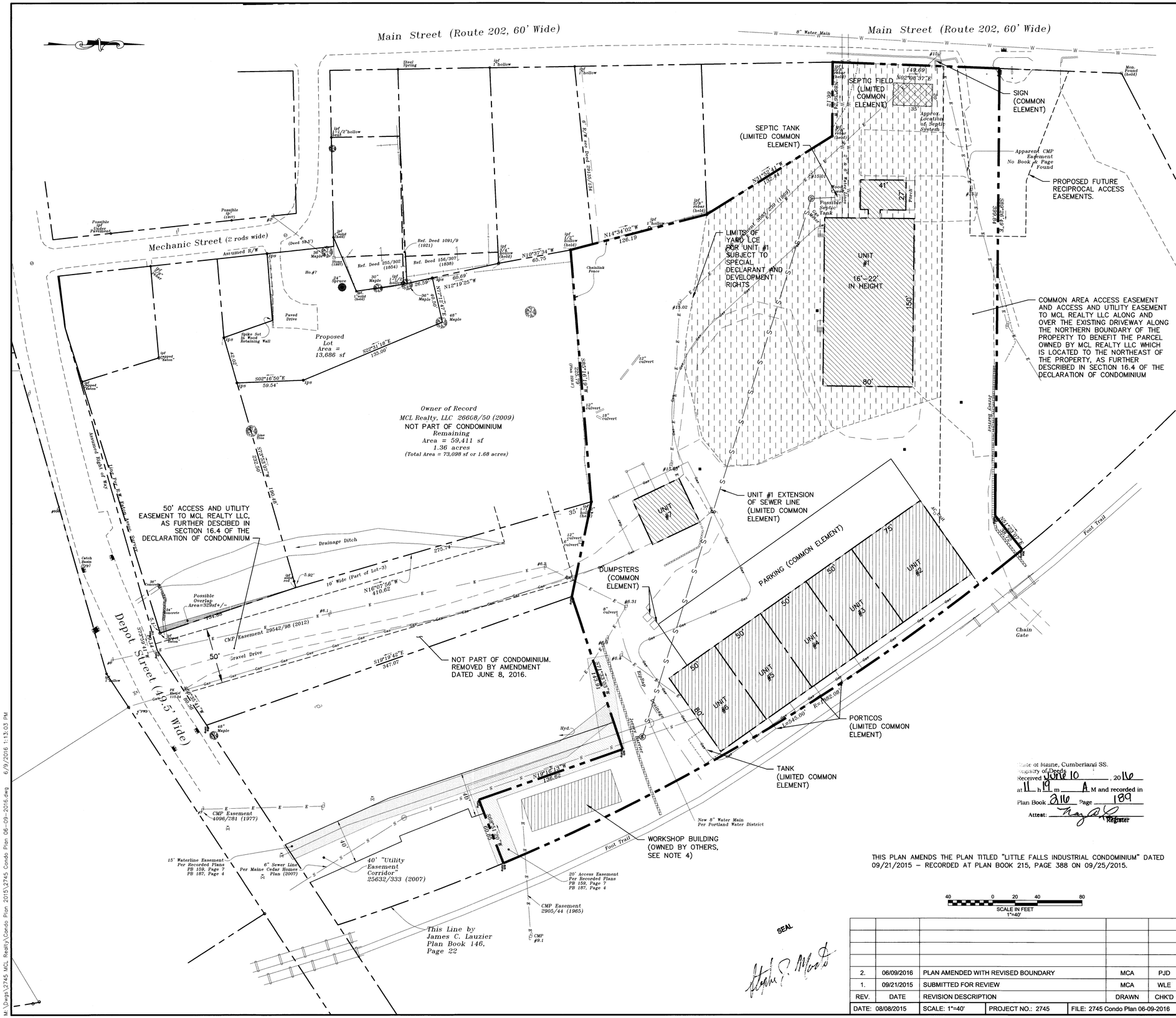
Main Street (Route 202, 60' Wide)
Main Street (Route 202, 60' Wide)
Mechanic Street (2 rods wide)
Depot Street (45' Wide)
SEPTIC FIELD (LIMITED COMMON ELEMENT)
SEPTIC TANK (LIMITED COMMON ELEMENT)
SIGN (COMMON ELEMENT)
Apparent CMP Easement No Book & Page Found
PROPOSED FUTURE RECIPROCAL ACCESS EASEMENTS.
LIMITS OF YARD LCE FOR UNIT #1 SUBJECT TO SPECIAL DECLARANT AND DEVELOPMENT RIGHTS
UNIT #1 16'-22' IN HEIGHT
COMMON AREA ACCESS EASEMENT AND ACCESS AND UTILITY EASEMENT TO MCL REALTY LLC ALONG AND OVER THE EXISTING DRIVEWAY ALONG THE NORTHERN BOUNDARY OF THE PROPERTY TO BENEFIT THE PARCEL OWNED BY MCL REALTY LLC WHICH IS LOCATED TO THE NORTHEAST OF THE PROPERTY, AS FURTHER DESCRIBED IN SECTION 16.4 OF THE DECLARATION OF CONDOMINIUM
Proposed Lot Area = 13,686 sf
Owner of Record
MCL Realty, LLC 26668/50 (2009)
NOT PART OF CONDOMINIUM
Remaining
Area = 59,411 sf
1.36 acres
(Total Area = 73,098 sf or 1.68 acres)
UNIT #1 EXTENSION OF SEWER LINE (LIMITED COMMON ELEMENT)
50' ACCESS AND UTILITY EASEMENT TO MCL REALTY LLC, AS FURTHER DESCIBED IN SECTION 16.4 OF THE DECLARATION OF CONDOMINIUM
DUMPSTERS (COMMON ELEMENT)
PARKING (COMMON ELEMENT)
UNIT #2
UNIT #3
UNIT #4
UNIT #5
UNIT #6
UNIT #7
NOT PART OF CONDOMINIUM. REMOVED BY AMENDMENT DATED JUNE 8, 2016.
PORTICOS (LIMITED COMMON ELEMENT)
TANK (LIMITED COMMON ELEMENT)
WORKSHOP BUILDING (OWNED BY OTHERS, SEE NOTE 4)
Drainage Ditch
Gravel Drive
CMP Easement 29542/98 (2012)
CMP Easement 4096/281 (1977)
CMP Easement 2905/44 (1965)
15' Waterline Easement Per Recorded Plans PB 159, Page 7 PB 187, Page 4
6" Sewer Line Per Maine Cedar Homes Plan (2007)
40' "Utility Easement Corridor" 25632/333 (2007)
20' Access Easement Per Recorded Plans PB 159, Page 7 PB 187, Page 4
This Line by James C. Lauzier Plan Book 146, Page 22
New 8" Water Main Per Portland Water District
Foot Trail
Chain Gate
Jersey Barrier
Chainlink Fence
Paved Drive
Possible Overlap Area=329sf+/-
Possible Septic Tank
Approx. Location of Septic System
Hydrant
Catch Basin (Typ)
Assumed Right of Way
Assumed R/W
Ref. Deed 1091/9 (1921)
Ref. Deed 255/302 (1854)
Ref. Deed 156/307 (1836)
Ref. Deed 26669/240 (1969)
Ref. Deed 29542/98 (2012)
Ref. Deed 29542/98 (2012)
Ref. Deed 26668/50 (2009)
Ref. Deed 26668/50 (2009)
Ref. Deed 26668/50 (2009

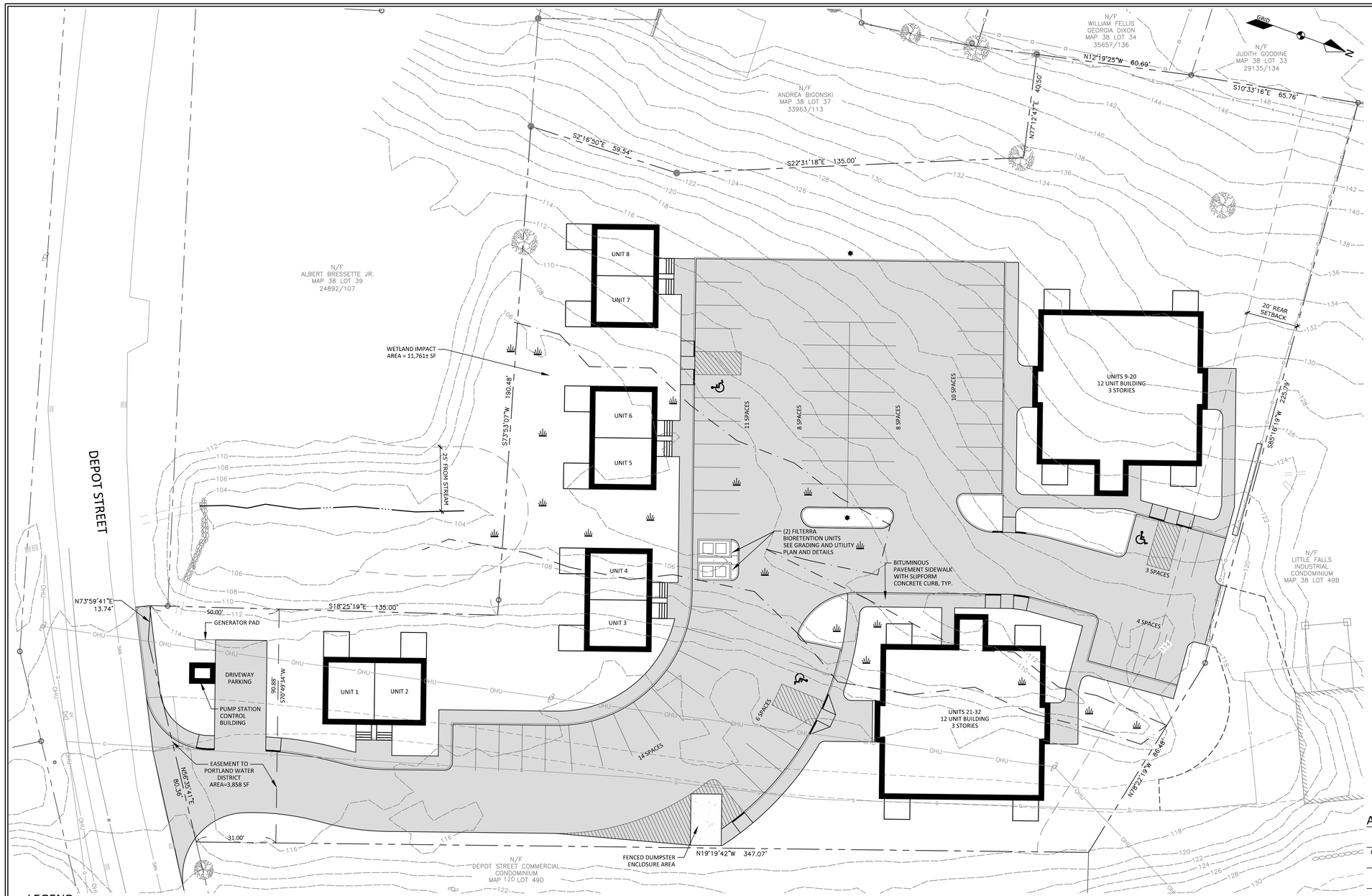

GENERAL NOTES:

1. THE OWNER OF RECORD OF THE PROPERTY IS MCL REALTY, LLC BY DEED RECORDED IN THE CUMBERLAND COUNTY REGISTRY OF DEEDS BOOK 26608 PAGE 50.
2. TOTAL AREA OF THE PARCEL IS APPROXIMATELY 91,766 SQUARE FEET (2.1 ACRES).
3. PARCEL TAX MAP REFERENCE: TOWN OF WINDHAM ASSESSORS MAP 38, LOT 37-A.
4. PLAN REFERENCES:
   A) AMENDED PLAN OF LITTLE FALLS INDUSTRIAL CONDOMINIUM, PREPARED FOR MCL REALTY LLC, PREPARED BY ST. GERMAIN COLLINS, RECORDED IN CUMBERLAND COUNTY REGISTRY OF DEEDS PLAN BOOK 216, PAGE 189.
5. HORIZONTAL DATUM: MAINE STATE PLANE, WEST ZONE, NAD83, U.S. FEET.
6. VERTICAL DATUM: NORTH AMERICAN VERTICAL DATUM OF 1988 (NAVD88)
7. BOUNDARY AND TOPOGRAPHIC FEATURES SHOWN HEREON IS BASED ON PLAN REFERENCE 4A.
8. TOPOGRAPHIC CONTOURS SHOWN HEREON ARE BASED ON 2 FT LIDAR CONTOURS OBTAINED FROM THE MAINE OFFICE OF GIS.
9. THE PROPERTY IS LOCATED IN THE VILLAGE COMMERCIAL DISTRICT.
10. SPACE AND BULK REQUIREMENTS: VC DISTRICT

MIN LOT SIZE:	5,000 SF (PUBLIC SEWER & WATER)
MIN STREET FRONTAGE:	50 FT
MIN FRONT YARD:	NONE
MIN SIDE YARD:	NONE
MIN REAR YARD:	20 FT
MAX BUILDING HEIGHT:	35 FT
MAX BUILDING COVERAGE:	NONE

11. WETLAND DELINEATION WAS PERFORMED BY MAINELY SOILS, LLC IN SEPTEMBER 2019. AS A RESULT OF THE DEVELOPMENT APPROXIMATELY 11,761 SF OF WETLANDS WILL BE IMPACTED. THE PROJECT IS SUBJECT TO THE NATURAL RESOURCES PROTECTION ACT TIER 1 WETLAND ALTERATION PERMIT ORDER _____.
12. TOTAL NUMBER OF PARKING SPACES PROVIDED = 64 SPACES
13. ALL BUILDINGS WILL REQUIRE THE INSTALLATION OF A ROOF DRIPEDGE FILTER FOR STORMWATER TREATMENT.
14. CONTRACTOR AND ALL PROPERTY OWNERS ARE REQUIRED TO COMPLY WITH THE INSPECTION, MAINTENANCE AND HOUSEKEEPING PLAN PREPARED FOR THIS PROJECT AS PART OF THIS PLAN.
15. THE PROJECT IS SUBJECT TO MDEP STORMWATER MANAGEMENT LAW PERMIT ORDER _____.

NET RESIDENTIAL DENSITY CALCULATIONS:

GROSS LAND AREA:	91,766 S.F.
DEDUCTIONS:	
1. RIGHT-OF-WAY	0 S.F.
2. STEEP SLOPES (OVER 25%)	0 S.F.
3. 100-YEAR FLOOD PLAIN	0 S.F.
4. RESOURCE PROTECTION DISTRICT	0 S.F.
5. VERY POORLY DRAINED SOILS	11,761 S.F.
6. SURFACE WATERBODIES	0 SF
7. SIGNIFICANT WILDLIFE HABITAT	0 S.F.
8. ENDANGERED BOTANICAL RESOURCES	0 S.F.
TOTAL NET AREA:	80,005 S.F.
REQUIRED NET AREA PER DWELLING:	2,500 S.F.
MAXIMUM ALLOWABLE LOTS/DWELLINGS:	32
NUMBER OF LOTS PROPOSED:	32

LEGEND

EXISTING		PROPOSED
	PROPERTY LINE/R.O.W.	
	ABUTTER PROPERTY LINE	
	SETBACK	
	EASEMENT LINE	
	GRANITE MONUMENT	
	IRON PIN/DRILL HOLE	
	BUILDING	
	EDGE OF PAVEMENT/CURB	
	EDGE OF GRAVEL	
	EDGE OF CONCRETE	
	EDGE OF WETLANDS	
	CENTERLINE OF STREAM	
-200-	CONTOUR LINE	-201-
	CATCHBASIN	
	CULVERT/STORMDRAIN	
	SEWER MANHOLE	
S	SANITARY SEWER PIPE	
FM	FORCE MAIN	
W	WATER MAIN	
WV	WATER VALVE	
	UTILITY POLE	
	LIGHT POLE	
OHU	OVERHEAD UTILITIES	
G	GAS MAIN	
	GAS VALVE	

APPROVED - WINDHAM PLANNING BOARD:

CHAIRPERSON DATE

STATE OF MAINE
_____ COUNTY SS. REGISTRY OF DEEDS
RECEIVED _____, 20____
AT _____h _____m _____M
AND RECORDED IN
PLAN BOOK _____ PAGE _____
ATTEST: _____
REGISTER

PRELIMINARY PLAN NOT FOR CONSTRUCTION

STATE OF MAINE
JAYSON R. HASKELL
No. 13002
LICENSED
PROFESSIONAL ENGINEER
11-18-19

DM ROMA
CONSULTING ENGINEERS
P.O. BOX 1116
WINDHAM, ME 04062
(207) 310 - 0506

REV	DATE	BY	DESCRIPTION
A	11-18-19	DMR	ISSUED FOR PRELIMINARY SUBDIVISION REVIEW

SUBDIVISION PLAN

DEPOT STREET RESIDENTIAL DEVELOPMENT
DEPOT STREET
WINDHAM, MAINE
FOR RECORD OWNER:
MCL REALTY, LLC
PO BOX 1206
WINDHAM, ME 04062

17035
JOB NUMBER:

1" = 20'
SCALE:

11-18-2019
DATE:

SHEET 3 OF 8

SB-1

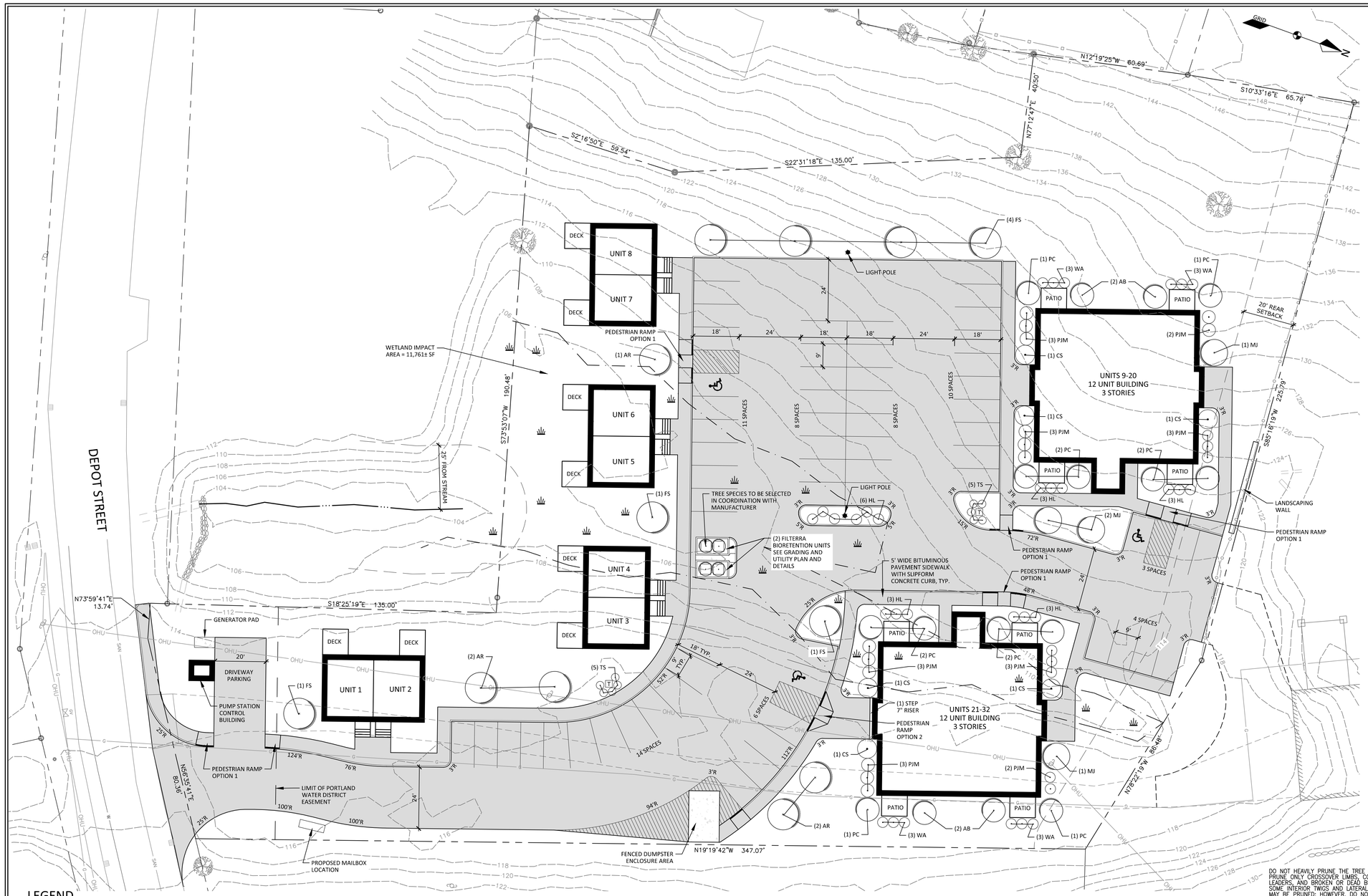

GENERAL NOTES:

1. HORIZONTAL DATUM: MAINE STATE PLANE, WEST ZONE, NAD83, U.S. FEET.
2. VERTICAL DATUM: NORTH AMERICAN VERTICAL DATUM OF 1988 (NAVD88)
3. WETLAND DELINEATION WAS PERFORMED BY MAINELY SOILS, LLC IN SEPTEMBER 2019. AS A RESULT OF THE DEVELOPMENT APPROXIMATELY 11,761 SF OF WETLANDS WILL BE IMPACTED. THE PROJECT IS SUBJECT TO THE NATURAL RESOURCES PROTECTION ACT TIER 1 WETLAND ALTERATION PERMIT ORDER _____.
4. ALL BUILDINGS WILL REQUIRE THE INSTALLATION OF A ROOF DRIPEDGE FILTER FOR STORMWATER TREATMENT. SEE DETAIL SHEET 6 OF 8 FOR LAYOUT.

PLANTING NOTES:

1. THE CONTRACTOR SHALL VERIFY THE LOCATION OF ALL UNDERGROUND UTILITIES PRIOR TO EXCAVATING PLANT PITS.
2. ALL MATERIALS SHALL CONFORM TO THE GUIDELINES ESTABLISHED BY THE AMERICAN ASSOCIATION OF NURSERYMEN.
3. IN THE CASE OF ANY DISCREPANCIES BETWEEN SPECIES AND QUANTITIES CALLED OUT IN THE PLANTING KEY AND THOSE SHOWN ON THE PLAN, QUANTITIES AND SPECIES SHOWN ON THE PLAN SHALL OVER-RIDE.
4. ALL PLANTING SHALL BE DONE IN ACCORDANCE WITH ACCEPTABLE HORTICULTURAL PRACTICES.
5. ALL PLANTS SUBJECT TO APPROVAL BY LANDSCAPE DESIGNER. ALL SUBSTITUTIONS MUST BE SUBMITTED FOR APPROVAL BY LANDSCAPE DESIGNER PRIOR TO ORDERING OR DELIVERY OF PLANT MATERIAL ON SITE. LANDSCAPE DESIGNER RESERVES THE RIGHT TO REJECT ANY PLANTINGS THAT DO NOT CONFORM TO THE DRAWINGS OR SPECIFICATIONS OUTLINED HEREIN.
6. LANDSCAPE DESIGNER SHALL APPROVE FINAL PLACEMENT OF ALL PLANT MATERIALS AND RESERVES THE RIGHT TO MAKE FIELD ADJUSTMENTS TO PLANTINGS AS NECESSARY.
7. EXISTING TREES TO REMAIN SHALL BE PROTECTED BY PVC FENCING PLACED AT THE DRIP-LINE OR AS SHOWN ON THE PLANS TO PREVENT DAMAGE AND COMPACTION OF THE ROOT SYSTEM. NO GRADING, SOIL DISTURBANCE, OR STORAGE OF MATERIALS OR EQUIPMENT SHALL OCCUR WITHIN THE DRIP-LINE UNLESS OTHERWISE SHOWN ON PLANS. ANY EXCAVATION WITHIN SUCH AREAS SHALL BE PERFORMED BY HAND TO AVOID DAMAGE OF THE ROOT SYSTEM.
8. CONTRACTOR SHALL REFER TO GRADING AND UTILITY PLAN FOR SLOPE STABILIZATION AREAS.
9. FINISH GRADE OF PLANTINGS SHALL MATCH ADJACENT FINISH GRADES UNLESS OTHERWISE NOTED ON DRAWINGS OR DIRECTED AND/OR APPROVED BY THE LANDSCAPE DESIGNER.
10. NO PLANT SHALL BE PUT INTO THE GROUND BEFORE ROUGH GRADING HAS BEEN FINISHED AND APPROVED BY THE LANDSCAPE DESIGNER OR OWNER'S REPRESENTATIVE.
11. ALL PLANTS SHALL BE SET PLUMB UNLESS OTHERWISE SPECIFIED.
12. ALL PLANTINGS SHALL BE TOPPED WITH A MINIMUM OF 3" OF WELL COMPOSTED, DARK PINE BARK MULCH.
13. DISTURBED AREAS SHALL BE SEEDED WITH PARK MIX OR AS APPROVED. SEEDING AREAS SHALL BE LIGHTLY MULCHED WITH A LAYER OF CLEAN, WEED-FREE STRAW.
14. ALL PLANTS SHALL BE WATERED THOROUGHLY TWICE DURING THE FIRST 24-HOUR PERIOD AFTER PLANTING. ALL PLANTS SHALL BE WATERED AS REQUIRED THEREAFTER TO ENSURE SURVIVAL AND OPTIMAL GROWTH THROUGH THE FIRST GROWING SEASON.
15. THE LANDSCAPE CONTRACTOR SHALL PROVIDE A 6" MINIMUM DEPTH OF TOPSOIL FOR ALL LAWN AREAS.
16. ALL PLANTING BEDS SHALL HAVE 18" MINIMUM DEPTH OF TOPSOIL.
17. ALL PLANTING BEDS ARE TO REMAIN FREE OF WEEDS DURING THE 1 YEAR GUARANTEE PERIOD.
18. ALL PLANT MATERIAL IS SUBJECT TO INSPECTION AND APPROVAL BY THE LANDSCAPE DESIGNER PRIOR TO AND AFTER PLANTING.
19. PLANT SPECIES MAY BE ADJUSTED BASED ON AVAILABILITY AT TIME OF PLANTING. ALL PLANT MATERIAL SUBSTITUTIONS ARE SUBJECT TO REVIEW AND APPROVAL BY THE LANDSCAPE DESIGNER.
20. MAINTENANCE SHALL BEGIN IMMEDIATELY AFTER PLANTING AND SHALL CONTINUE FOR A PERIOD OF ONE YEAR FROM THE DATE OF ACCEPTANCE. MAINTENANCE SHALL INCLUDE WATERING, MULCHING, TIGHTENING & REPLACING OF GUYS, REPLACEMENT OF SICK OR DEAD PLANTS, RESETTING PLANTS TO PROPER GRADE OR UPRIGHT (PLUMB) POSITION, RESTORATION OF SAUCERS, AND ALL OTHER CARE NEEDED FOR PROPER GROWTH OF THE PLANTS.
21. PLANT MATERIAL SHALL BE GUARANTEED BY THE CONTRACTOR FOR A PERIOD OF ONE YEAR FROM THE DATE OF INSTALLATION. DURING THE ONE YEAR GUARANTEE, THE CONTRACTOR SHALL REPLACE, IN KIND, ANY DEAD, DISEASED, OR SUBSTANDARD PLANT MATERIAL AT NO COST TO THE OWNER. THE CONTRACTOR SHALL RECEIVE FINAL ACCEPTANCE FROM THE OWNER FOLLOWING THE ONE YEAR GUARANTEE, PROVIDED THE PROVISIONS OF THE PLANT GUARANTEE HAVE BEEN SATISFACTORILY MET.
22. STREET TREES SHALL BE A MINIMUM OF 2" CALIPER AND 6' TALL AT TIME OF PLANTING.

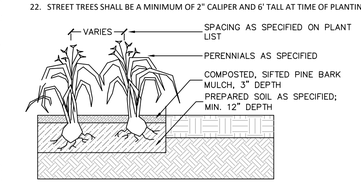

PERENNIALS INSTALLATION DETAIL

NOT TO SCALE

LEGEND

EXISTING		PROPOSED
	PROPERTY LINE/R.O.W.	
	ABUTTER PROPERTY LINE	
	SETBACK	
	EASEMENT LINE	
	GRANITE MONUMENT	
	IRON PIN/DRILL HOLE	
	BUILDING	
	EDGE OF PAVEMENT/CURB	
	EDGE OF GRAVEL	
	EDGE OF CONCRETE	
	EDGE OF WETLANDS	
	CENTERLINE OF STREAM	
200 201	CONTOUR LINE	
	CATCHBASIN	
	CULVERT/STORMDRAIN	
S	SEWER MANHOLE	
S	SANITARY SEWER PIPE	
FM	FORCE MAIN	
W	WATER MAIN	
WV	WATER VALVE	
	UTILITY POLE	
	LIGHT POLE	
OHU	OVERHEAD UTILITIES	
G	GAS MAIN	
	GAS VALVE	

ABBREVIATIONS
REV. = REVISION
QTY. = QUANTITY
HT. = HEIGHT
B&B = BALL AND BURLAP
GAL. = GALLON
CAL. = CALIPER

PLANT LIST

TREES	QTY	KEY	BOTANICAL	COMMON	SIZE
	4	AB	Amelanchier x grandiflora 'Autumn Brilliance'	Autumn Brilliance Shadbush	5'-6' HT
	5	AR	Acer rubrum 'Red Sunset'	Red Maple	2"-3" CAL.
	6	CS	Cornus alba 'Ivory Halo'	Ivory Halo Dogwood	5 GAL.
	7	FS	Fagus sylvatica 'Tricolor'	Tricolor Beech	2"-3" CAL.
	4	MJ	Magnolia liliflora 'Jane'	Jane Magnolia	7 GAL.
	12	PC	Pinus cembra 'Prairie Statesman'	Prairie Statesman	4'-5' HT.
PERENNIALS & SHRUBS	**QTY**	**KEY**	**BOTANICAL**	**COMMON**	**SIZE**
	18	HL	Hydrangea paniculata 'Little Quickfire'	Little Quickfire Hydrangea	3 GAL.
	22	PJM	Rhododendron 'PJM Compacta'	PJM Compacta Rhododendron	18"-24" HT.
	10	TS	Thuja occidentalis 'Smaragd'	Emerald Green Arborvitae	3 GAL.
	12	WA	Weigela florida 'Alexandra'	Wine and Roses Weigela	3 GAL.

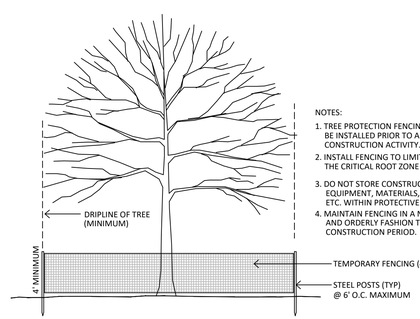

NOTES:
1. TREE PROTECTION FENCING SHALL BE INSTALLED PRIOR TO ANY CONSTRUCTION ACTIVITY.
2. INSTALL FENCING TO LIMIT OF THE CRITICAL ROOT ZONE OF TREE
3. DO NOT STORE CONSTRUCTION EQUIPMENT, MATERIALS, TOOLS, ETC. WITHIN PROTECTIVE FENCING.
4. MAINTAIN FENCING IN A NEAT AND ORDERLY FASHION THROUGHOUT CONSTRUCTION PERIOD.

TREE PROTECTION DETAIL - TEMPORARY FENCE

NOT TO SCALE

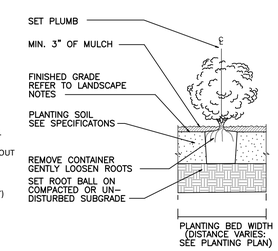

SHRUB INSTALLATION DETAIL

NOT TO SCALE

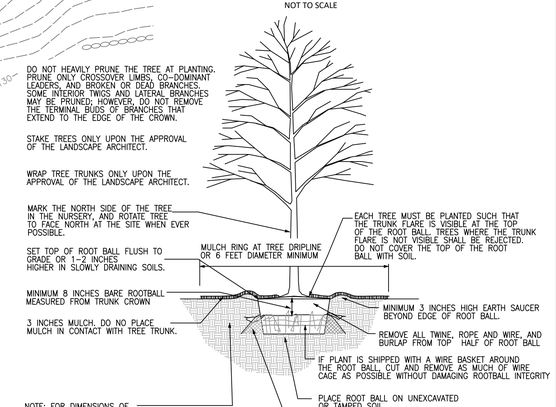

TREE INSTALLATION DETAIL - BALL & BURLAP

NOT TO SCALE

PRELIMINARY PLAN NOT FOR CONSTRUCTION

11-18-19

STATE OF MAINE JAYSON R. HASKELL No. 13002 LICENSED PROFESSIONAL ENGINEER

DM ROMA
CONSULTING ENGINEERS
P.O. BOX 1116
WINDHAM, ME 04062
(207) 310 - 0506

REV	DATE	BY	DESCRIPTION
A	11-18-19	DMR	ISSUED FOR PRELIMINARY SUBDIVISION REVIEW

SITE AND LANDSCAPING PLAN

DEPOT STREET RESIDENTIAL DEVELOPMENT

DEPOT STREET
WINDHAM, MAINE

FOR RECORD OWNER:
MCL REALTY, LLC
PO BOX 1206
WINDHAM, ME 04062

17035	JOB NUMBER:
1" = 20'	SCALE:
11-18-2019	DATE:
SHEET 4 OF 8	
S-1	

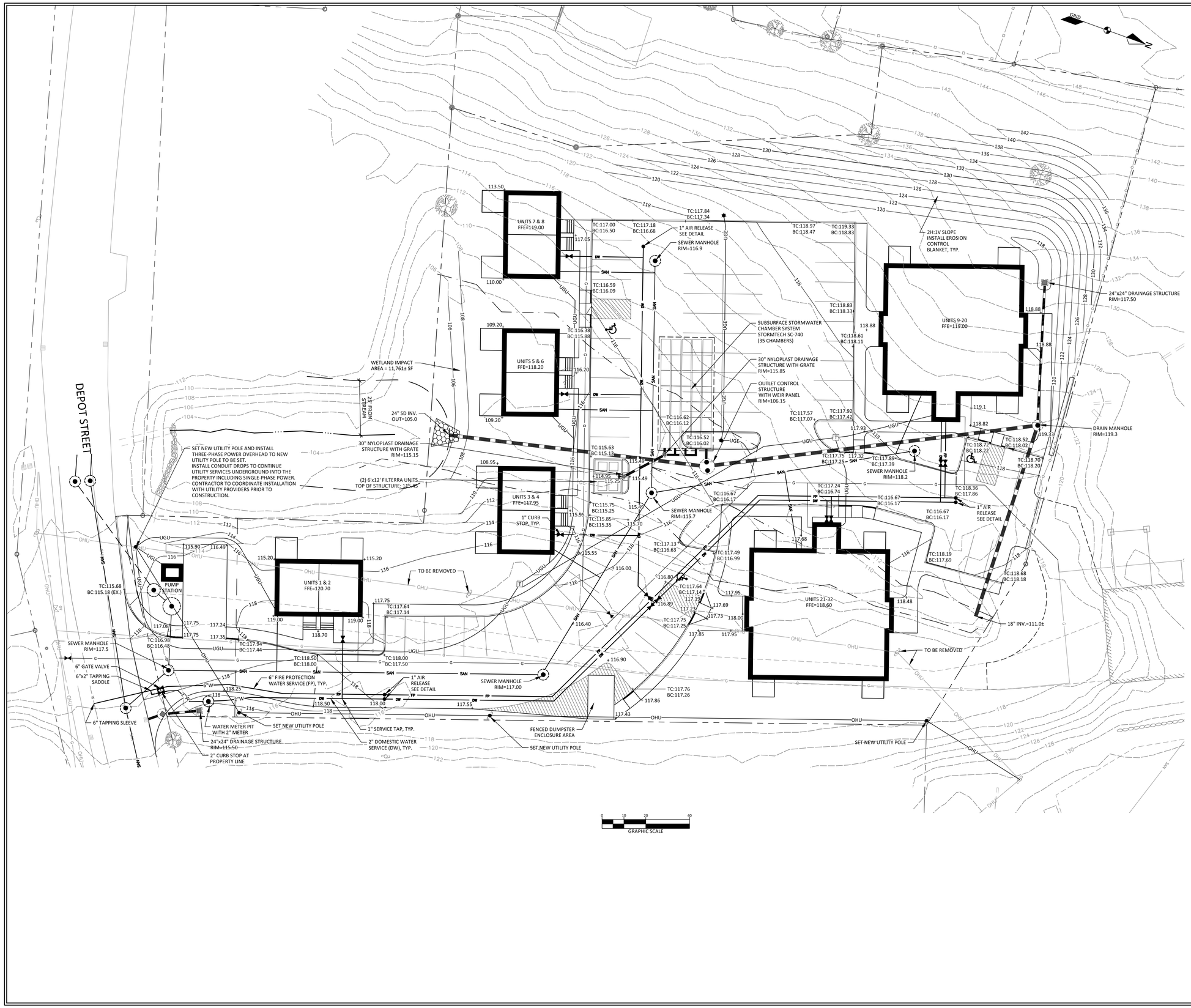

LEGEND

EXISTING		PROPOSED
	PROPERTY LINE/R.O.W.	
	ABUTTER PROPERTY LINE	
	TIE LINE	
	SETBACK	
	EASEMENT LINE	
	GRANITE MONUMENT	
	IRON PIN/DRILL HOLE	
	CENTERLINE	
	BUILDING	
	EDGE OF PAVEMENT/CURB	
	EDGE OF GRAVEL	
	EDGE OF CONCRETE	
	EDGE OF WETLANDS	
	CENTERLINE OF STREAM	
200 201	CONTOUR LINE	200 201
	TREELINE	
	CATCHBASIN	
	DRAINAGE MANHOLE	
	CULVERT/STORMDRAIN	
	UNDERDRAIN	UD
	SEWER MANHOLE	
S	SANITARY SEWER PIPE	S
FM	FORCE MAIN	FM
W	WATER MAIN	W
	WATER VALVE	
	HYDRANT	
	UTILITY POLE	
	LIGHT POLE	
OHU	OVERHEAD UTILITIES	OHU
UGU	UNDERGROUND UTILITIES	UGU
	TRANSFORMER PAD	T
G	GAS MAIN	G
	GAS VALVE	
	RIPRAP	
	SILT FENCE	SF

PRELIMINARY PLAN NOT FOR CONSTRUCTION

STATE OF MAINE
JAYSON R. HASKELL
No. 13002
LICENSED
PROFESSIONAL ENGINEER
11-18-19

DM ROMA
CONSULTING ENGINEERS
P.O. BOX 1116
WINDHAM, ME 04062
(207) 310 - 0506

REV	DATE	BY	DESCRIPTION
A	11-18-19	DMR	ISSUED FOR PRELIMINARY SUBDIVISION REVIEW

GRADING AND UTILITY PLAN

DEPOT STREET RESIDENTIAL DEVELOPMENT

DEPOT STREET
WINDHAM, MAINE

FOR RECORD OWNER:
MCL REALTY, LLC
PO BOX 1206
WINDHAM, ME 04062

17035
JOB NUMBER:

1" = 20'
SCALE:

11-18-2019
DATE:

SHEET 5 OF 8

GU-1

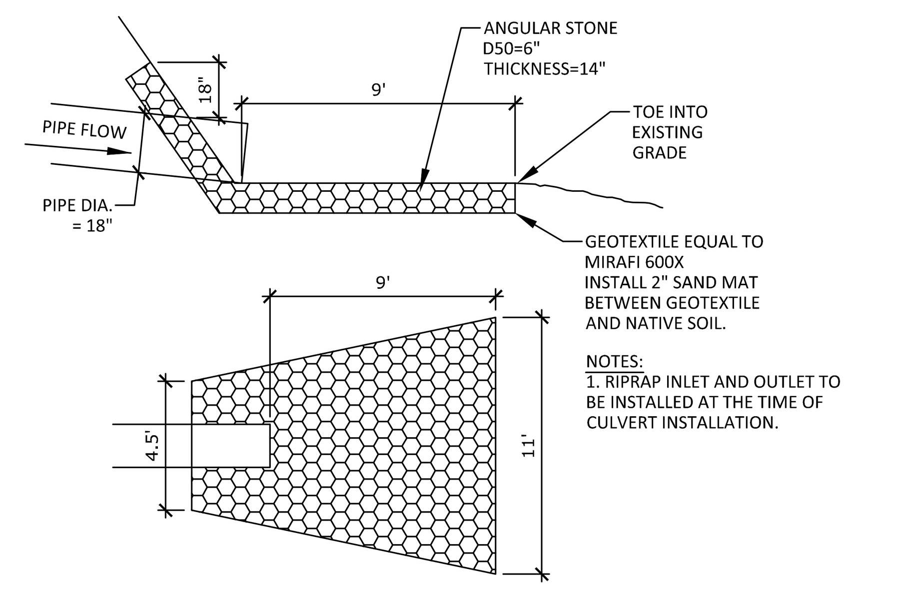

RIPRAP APRON AT PIPE

NOT TO SCALE

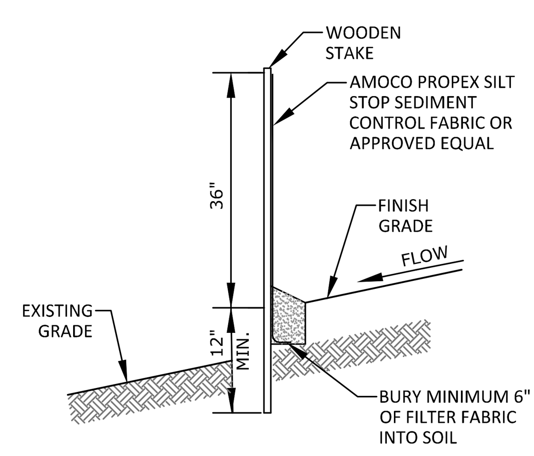

SEDIMENT FILTER FENCE

NOT TO SCALE

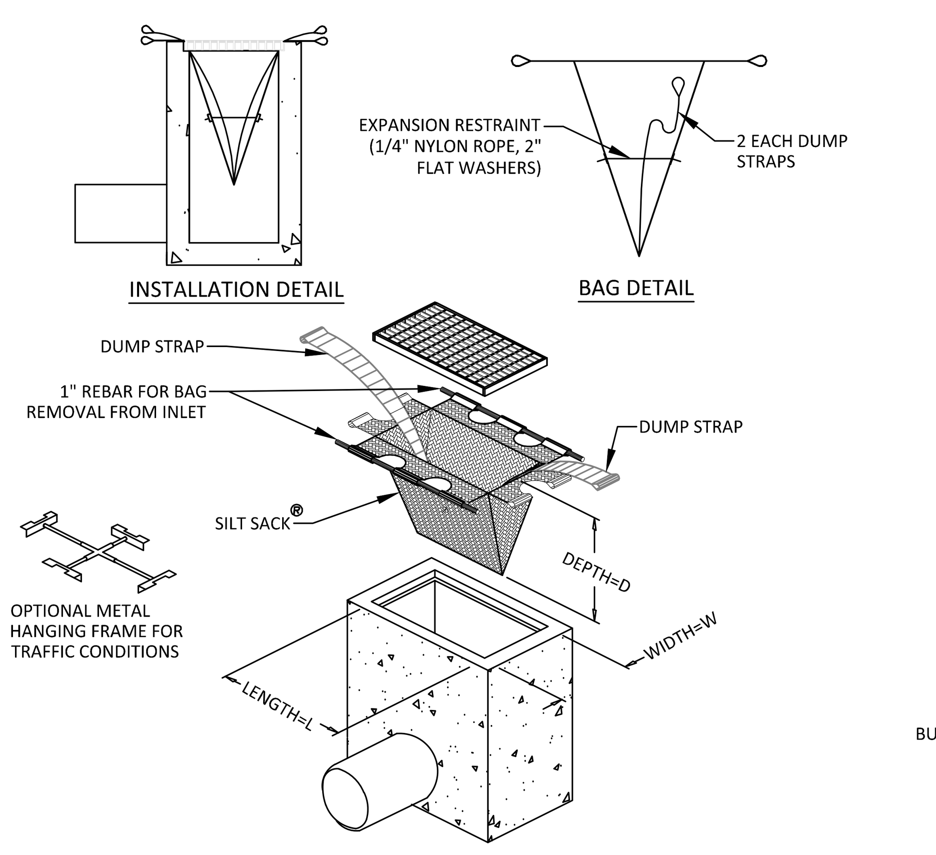

INLET PROTECTION

NOT TO SCALE

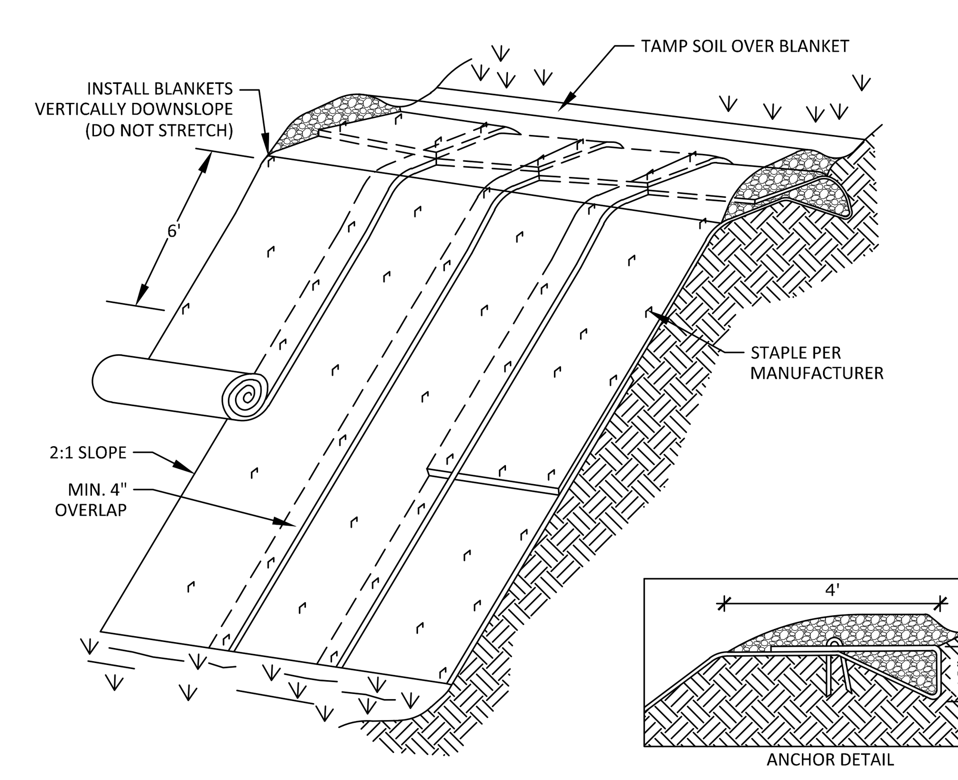

EROSION CONTROL BLANKET

NOT TO SCALE

HOUSEKEEPING NOTES

1. SPILL PREVENTION: CONTROLS MUST BE USED TO PREVENT POLLUTANTS FROM CONSTRUCTION AND WASTE MATERIALS ON SITE TO ENTER STORMWATER, WHICH INCLUDES STORAGE PRACTICES TO MINIMIZE EXPOSURE OF THE MATERIALS TO STORMWATER. THE SITE CONTRACTOR OR OPERATOR MUST DEVELOP, AND IMPLEMENT AS NECESSARY, APPROPRIATE SPILL PREVENTION, CONTAINMENT, AND RESPONSE PLANNING MEASURES.

2. GROUNDWATER PROTECTION: DURING CONSTRUCTION, LIQUID PETROLEUM PRODUCTS AND OTHER HAZARDOUS MATERIALS WITH THE POTENTIAL TO CONTAMINATE GROUNDWATER MAY NOT BE STORED OR HANDLED IN AREAS OF THE SITE DRAINING TO AN INFILTRATION AREA. AN "INFILTRATION AREA" IS ANY AREA OF THE SITE THAT BY DESIGN OR AS A RESULT OF SOILS, TOPOGRAPHY AND OTHER RELEVANT FACTORS ACCUMULATES RUNOFF THAT INFILTRATES INTO THE SOIL. DIKES, BERMS, SUMPS, AND OTHER FORMS OF SECONDARY CONTAINMENT THAT PREVENT DISCHARGE TO GROUNDWATER MAY BE USED TO ISOLATE PORTIONS OF THE SITE FOR THE PURPOSES OF STORAGE AND HANDLING OF THESE MATERIALS. ANY PROJECT PROPOSING INFILTRATION OF STORMWATER MUST PROVIDE ADEQUATE PRE-TREATMENT OF STORMWATER PRIOR TO DISCHARGE OF STORMWATER TO THE INFILTRATION AREA, OR PROVIDE FOR TREATMENT WITHIN THE INFILTRATION AREA, IN ORDER TO PREVENT THE ACCUMULATION OF FINES, REDUCTION IN INFILTRATION RATE, AND CONSEQUENT FLOODING AND DESTABILIZATION.

3. FUGITIVE SEDIMENT AND DUST: ACTIONS MUST BE TAKEN TO ENSURE THAT ACTIVITIES DO NOT RESULT IN NOTICEABLE EROSION OF SOILS OR FUGITIVE DUST EMISSIONS DURING OR AFTER CONSTRUCTION. OIL MAY NOT BE USED FOR DUST CONTROL, BUT OTHER WATER ADDITIVES MAY BE CONSIDERED AS NEEDED. A STABILIZED CONSTRUCTION ENTRANCE (SCE) SHOULD BE INCLUDED TO MINIMIZE TRACKING OF MUD AND SEDIMENT. IF OFF-SITE TRACKING OCCURS, PUBLIC ROADS SHOULD BE SWEPT IMMEDIATELY AND NO LESS THAN ONCE A WEEK AND PRIOR TO SIGNIFICANT STORM EVENTS. OPERATIONS DURING DRY MONTHS, THAT EXPERIENCE FUGITIVE DUST PROBLEMS, SHOULD WET DOWN UNPAVED ACCESS ROADS ONCE A WEEK OR MORE FREQUENTLY AS NEEDED WITH A WATER ADDITIVE TO SUPPRESS FUGITIVE SEDIMENT AND DUST.

4. DEBRIS AND OTHER MATERIALS: MINIMIZE THE EXPOSURE OF CONSTRUCTION DEBRIS, BUILDING AND LANDSCAPING MATERIALS, TRASH, FERTILIZERS, PESTICIDES, HERBICIDES, DETERGENTS, SANITARY WASTE AND OTHER MATERIALS TO PRECIPITATION AND STORMWATER RUNOFF. THESE MATERIALS MUST BE PREVENTED FROM BECOMING A POLLUTANT SOURCE.

5. EXCAVATION DE-WATERING: EXCAVATION DE-WATERING IS THE REMOVAL OF WATER FROM TRENCHES, FOUNDATIONS, COFFER DAMS, PONDS, AND OTHER AREAS WITHIN THE CONSTRUCTION AREA THAT RETAIN WATER AFTER EXCAVATION. IN MOST CASES THE COLLECTED WATER IS HEAVILY SILTED AND HINDERS CORRECT AND SAFE CONSTRUCTION PRACTICES. THE COLLECTED WATER REMOVED FROM THE PONDED AREA, EITHER THROUGH GRAVITY OR PUMPING, MUST BE SPREAD THROUGH NATURAL WOODED BUFFERS OR REMOVED TO AREAS THAT ARE SPECIFICALLY DESIGNED TO COLLECT THE MAXIMUM AMOUNT OF SEDIMENT POSSIBLE, LIKE A COFFERDAM SEDIMENTATION BASIN. AVOID ALLOWING THE WATER TO FLOW OVER DISTURBED AREAS OF THE SITE. EQUIVALENT MEASURES MAY BE TAKEN IF APPROVED BY THE DEPARTMENT.

6. AUTHORIZED NON-STORMWATER DISCHARGES: IDENTIFY AND PREVENT CONTAMINATION BY NON-STORMWATER DISCHARGES. WHERE ALLOWED NON-STORMWATER DISCHARGES EXIST, THEY MUST BE IDENTIFIED AND STEPS SHOULD BE TAKEN TO ENSURE THE IMPLEMENTATION OF APPROPRIATE POLLUTION PREVENTION MEASURES FOR THE NON-STORMWATER COMPONENT(S) OF THE DISCHARGE. AUTHORIZED NON-STORMWATER DISCHARGES ARE:
(a) DISCHARGES FROM FIREFIGHTING ACTIVITY;
(b) FIRE HYDRANT FLUSHINGS;
(c) VEHICLE WASHWATER IF DETERGENTS ARE NOT USED AND WASHING IS LIMITED TO THE EXTERIOR OF VEHICLES (ENGINE, UNDERCARRIAGE AND TRANSMISSION WASHING IS PROHIBITED);
(d) DUST CONTROL RUNOFF IN ACCORDANCE WITH PERMIT CONDITIONS AND APPENDIX (C)(3);
(e) ROUTINE EXTERNAL BUILDING WASHDOWN, NOT INCLUDING SURFACE PAINT REMOVAL, THAT DOES NOT INVOLVE DETERGENTS;
(f) PAVEMENT WASHWATER (WHERE SPILLS/LEAKS OF TOXIC OR HAZARDOUS MATERIALS HAVE NOT OCCURRED, UNLESS ALL SPILLED MATERIAL HAD BEEN REMOVED) IF DETERGENTS ARE NOT USED;
(g) UNCONTAMINATED AIR CONDITIONING OR COMPRESSOR CONDENSATE;
(h) UNCONTAMINATED GROUNDWATER OR SPRING WATER;
(i) FOUNDATION OR FOOTER DRAIN-WATER WHERE FLOWS ARE NOT CONTAMINATED;
(j) UNCONTAMINATED EXCAVATION DEWATERING (SEE REQUIREMENTS IN APPENDIX C(5));
(k) POTABLE WATER SOURCES INCLUDING WATERLINE FLUSHINGS; AND
(l) LANDSCAPE IRRIGATION.

7. UNAUTHORIZED NON-STORMWATER DISCHARGES: APPROVAL FROM THE MDEP DOES NOT AUTHORIZE A DISCHARGE THAT IS MIXED WITH A SOURCE OF NON_STORMWATER, OTHER THAN THOSE DISCHARGES IN COMPLIANCE WITH SECTION 6 ABOVE. SPECIFICALLY, THE MDEP'S APPROVAL DOES NOT AUTHORIZE DISCHARGES OF THE FOLLOWING:
(a) WASTEWATER FROM THE WASHOUT OR CLEANOUT OF CONCRETE, STUCCO, PAINT, FORM RELEASE OILS, CURING COMPOUNDS OR OTHER CONSTRUCTION MATERIALS;
(b) FUELS, OILS OR OTHER POLLUTANTS USED IN VEHICLE AND EQUIPMENT OPERATION AND MAINTENANCE;
(c) SOAPS, SOLVENTS, OR DETERGENTS USED IN VEHICLE AND EQUIPMENT WASHING; AND
(d) TOXIC OR HAZARDOUS SUBSTANCES FROM A SPILL OR OTHER RELEASE.

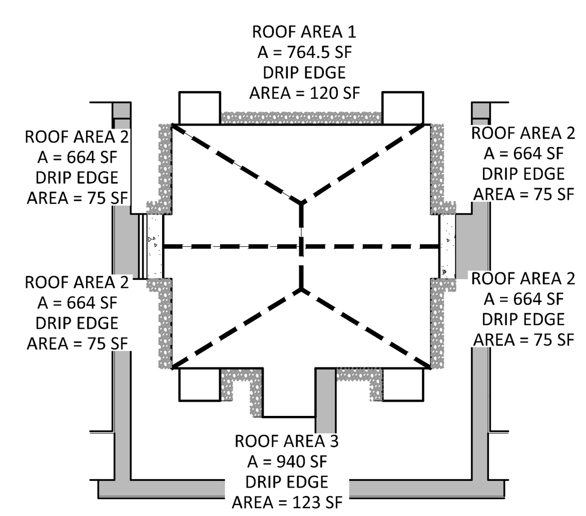

TYPICAL BUILDING DRIP EDGE LAYOUT

NOT TO SCALE

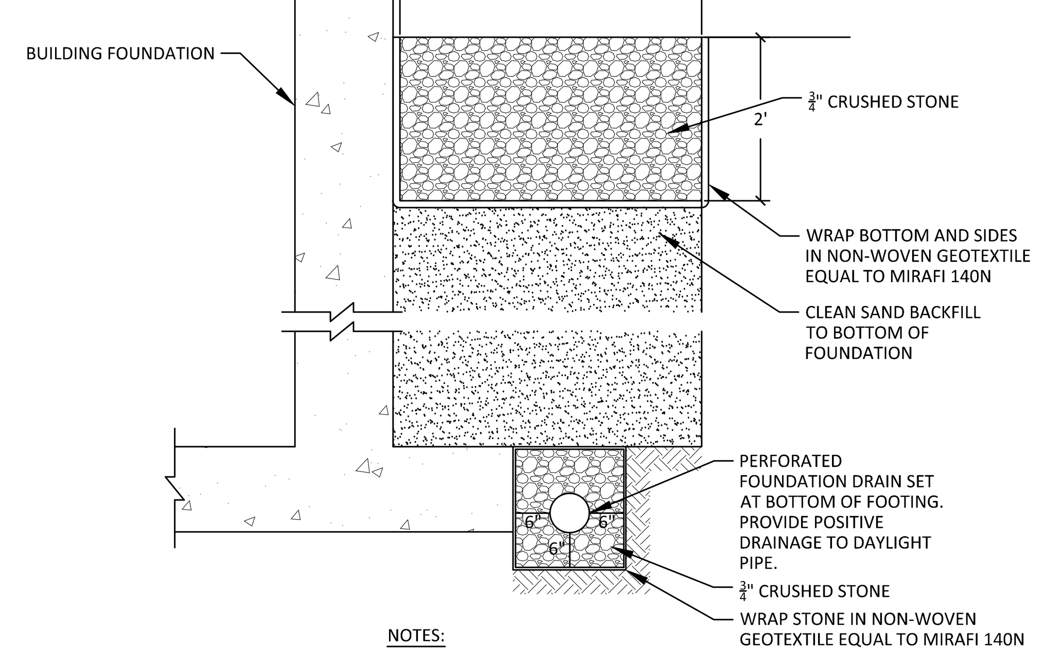

NOTES:

1. ALL NEW BUILDINGS REQUIRE ROOF DRIP EDGES

ROOF DRIP EDGE

NOT TO SCALE

EROSION AND SEDIMENTATION CONTROL NOTES:

EXCAVATION AND EARTHWORK SHALL BE COMPLETED SUCH THAT NO MORE THAN 1 ACRE OF THE SITE IS WITHOUT STABILIZATION AT ANY ONE TIME. LIMIT THE EXPOSED AREA TO THOSE AREAS IN WHICH WORK IS TO OCCUR DURING THE FOLLOWING 15 DAYS AND THAT CAN BE MULCHED IN ONE DAY.

IN ORDER TO EFFECTIVELY PREVENT AND CONTROL EROSION RELATED TO SOIL DISTURBANCE, THE FOLLOWING BEST MANAGEMENT PRACTICES (BMPS) SHALL BE EMPLOYED:

1. POLLUTION PREVENTION

MINIMIZE DISTURBED AREAS AND PROTECT NATURAL DOWNGRADIENT BUFFER AREAS TO THE EXTENT PRACTICABLE. CONTROL STORMWATER VOLUME AND VELOCITY WITHIN THE SITE TO MINIMIZE SOIL EROSION. MINIMIZE THE DISTURBANCE OF STEEP SLOPES. CONTROL STORMWATER DISCHARGES, INCLUDING BOTH PEAK FLOW RATES AND VOLUME, TO MINIMIZE EROSION AT OUTLETS. THE DISCHARGE MAY NOT RESULT IN EROSION OF ANY OPEN DRAINAGE CHANNELS, SWALES, STREAM CHANNELS OR STREAM BANKS, UPLAND, OR COASTAL OR FRESHWATER WETLANDS OFF THE PROJECT SITE.

WHENEVER PRACTICABLE, NO DISTURBANCE ACTIVITIES SHOULD TAKE PLACE WITHIN 50 FEET OF ANY PROTECTED NATURAL RESOURCE. IF DISTURBANCE ACTIVITIES TAKE PLACE BETWEEN 30 FEET AND 50 FEET OF ANY PROTECTED NATURAL RESOURCE, AND STORMWATER DISCHARGES THROUGH THE DISTURBED AREAS TOWARD THE PROTECTED NATURAL RESOURCE, PERIMETER EROSION CONTROLS MUST BE DOUBLED. IF DISTURBANCE ACTIVITIES TAKE PLACE LESS THAN 30 FEET FROM ANY PROTECTED NATURAL RESOURCE, AND STORMWATER DISCHARGES THROUGH THE DISTURBED AREAS TOWARD THE PROTECTED NATURAL RESOURCE, PERIMETER EROSION CONTROLS MUST BE DOUBLED AND DISTURBED AREAS MUST BE TEMPORARILY OR PERMANENTLY STABILIZED WITHIN 7 DAYS.

2. TEMPORARY SOIL STABILIZATION BMPS

TEMPORARY MULCHING SHALL BE APPLIED IMMEDIATELY TO ANY AREAS THAT HAVE BEEN TEMPORARILY OR PERMANENTLY SEEDED. ANY DISTURBED SOIL WITHIN 75' OF A STREAM, WATER BODY OR WETLAND MUST RECEIVE TEMPORARY MULCH WITHIN 48 HOURS FOLLOWING DISTURBANCE AND BEFORE ANY STORM EVENT. ALL OTHER AREAS SHALL RECEIVE TEMPORARY MULCH WITHIN 7 DAYS OF DISTURBANCE. AREAS WHICH CANNOT BE SEEDED DURING THE GROWING SEASON SHALL BE MULCHED FOR OVER-WINTER PROTECTION. THE FOLLOWING ARE ACCEPTABLE TEMPORARY MULCHING METHODS:

HAY OR STRAW MULCHES NEED TO BE AIR-DRIED, FREE OF UNDESIRABLE SEEDS AND COARSE MATERIALS. APPLICATION RATE MUST BE 2 BALES (70-90 POUNDS) PER 1000 SQ FT OR 1.5 TO 2 TONS (90-100 BALES) PER ACRE TO COVER 75-90% OF THE GROUND SURFACE. HAY OR STRAW CAN BE DRIVEN INTO THE GROUND WITH TRACKED EQUIPMENT IF SLOPES ARE LESS THAN 3%, OR CAN BE ANCHORED WITH JUTE, WOOD FIBER OR PLASTIC NETTING ON STEEPER SLOPES.

EROSION CONTROL MIX MUST CONSIST PRIMARILY OF ORGANIC MATERIAL AND WILL INCLUDE ANY OF THE FOLLOWING: SHREDDED BARK, STUMP GRINDINGS, COMPOSTED BARK OR OTHER ACCEPTABLE PRODUCTS BASED ON A SIMILAR RAW SOURCE. WOOD OR BARK CHIPS, GROUND CONSTRUCTION DEBRIS OR REPROCESSED WOOD PRODUCTS ARE NOT ACCEPTABLE. EROSION CONTROL MIX CAN BE USED AS A STAND-ALONE REINFORCEMENT ON SLOPES OF 2 HORIZONTAL TO 1 VERTICAL OR LESS AND DRAINING IN SHEET FLOW. IT CAN BE PLACED WITH A HYDRAULIC BUCKET, WITH A PNEUMATIC BLOWER OR BY HAND, AND MUST PROVIDE 100% SOIL COVERAGE.

EROSION CONTROL MIX SHALL MEET THE FOLLOWING SPECIFICATIONS:
- -ORGANIC MATTER CONTENT SHALL BE BETWEEN 80-100%, DRY WEIGHT BASIS.
- -PARTICLE SIZE BY WEIGHT SHALL BE 100% PASSING A 6 IN. SCREEN AND BETWEEN 70-85% PASSING 0.75 IN. SCREEN
- -ORGANIC PORTION NEEDS TO BE FIBROUS AND ELONGATED
- -LARGE PORTIONS OF SILTS, CLAYS OR FINE SANDS ARE NOT ACCEPTABLE IN THE MIX

WHEN USED AS MULCH, THE THICKNESS OF THE ERISION CONTROL MIX IS BASED UPON THE FOLLOWING:

LENGTH OF SLOPE	3:1 SLOPE OR LESS	BETWEEN 2:1 AND 3:1 SLOPE
LESS THAN 20 FT	2.0 IN.	4.0 IN.
BETWEEN 20 - 60 FT	3.0 IN.	5.0 IN.
BETWEEN 60 - 100 FT	4.0 IN.	6.0 IN.

CHEMICAL MULCHES AND SOIL BINDERS MAY BE USED AS DIRECTED BY THE ENGINEER. THE CONTRACTOR SHALL CONSULT WITH THE MANUFACTURER TO DETERMINE ADEQUATE APPLICATION RATES AND METHODS.

TEMPORARY MULCH SHALL BE INSPECTED FOLLOWING ANY SIGNIFICANT RAINFALL EVENT. IF LESS THAN 90% OF THE SOIL SURFACE IS COVERED BY MULCH, ADDITIONAL MULCH SHALL BE IMMEDIATELY APPLIED. ERISION CONTROL MATS AND MULCH ANCHORING MUST BE INSPECTED AFTER RAINFALL EVENTS FOR DISLOCATION OR FAILURE, AND REPAIRED IMMEDIATELY. INSPECTIONS SHALL TAKE PLACE UNTIL 95% OF THE SOIL SURFACE IS COVERED WITH PERMANENT VEGETATION. WHERE MULCH IS USED WITH ORNAMENTAL PLANTINGS, INSPECT PERIODICALLY THROUGHOUT THE YEAR TO DETERMINE IF MULCH IS MAINTAINING COVERAGE OF THE SOIL SURFACE, AND REPAIR AS NEEDED.

TEMPORARY VEGETATION SHALL BE ESTABLISHED ON SOILS THAT WILL NOT BE BROUGHT TO FINAL GRADE FOR A PERIOD OF MORE THAN 30 DAYS. IF TEMPORARY VEGETATION CANNOT BE ESTABLISHED PRIOR TO OCTOBER 15, TEMPORARY MULCH SHALL BE APPLIED THROUGH THE WINTER AND TEMPORARY VEGETATION SHALL BE PLANTED AT THE BEGINNING OF THE GROWING SEASON THE FOLLOWING YEAR. TO PREPARE THE SEEDBED, THE CONTRACTOR SHALL APPLY FERTILIZER AT A RATE OF 600 POUNDS PER ACRE OF 10-10-10 (N-P205-K20) OR EQUIVALENT AND LIMESTONE AT A RATE OF 3 TONS PER ACRE, IF NECESSARY. LOOSEN SOIL TO A DEPTH OF 2 INCHES IN AREAS THAT HAVE BEEN COMPACTED BY CONSTRUCTION ACTIVITIES. GRASS SEED SHALL BE SELECTED BASED UPON THE TIME OF YEAR THE PLANTING WILL TAKE PLACE AS SUMMARIZED IN THE FOLLOWING TABLE:

SEED	LB. PER ACRE	RECOMMENDED SEEDING DATES
WINTER RYE	112	8/15 - 10/1
OATS	80	4/1 - 7/1 8/15 - 9/15
ANNUAL RYEGRASS	40	4/1 - 7/1

TEMPORARY SEEDING SHALL BE PERIODICALLY INSPECTED TO MAINTAIN AT LEAST 95% VEGETATIVE COVER OF SOIL SURFACE. IF ANY EVIDENCE OF EROSION OR SEDIMENTATION IS APPARENT, REPAIRS SHALL BE MADE AND OTHER TEMPORARY MEASURES SHALL BE USED IN THE INTERIM SUCH AS TEMPORARY MULCH, FILTER BARRIERS, ETC.

3. SEDIMENT BARRIER BMPS

PRIOR TO CONSTRUCTION TEMPORARY SEDIMENT BARRIERS SHALL BE INSTALLED AT THE DOWNGRADIENT EDGE OF ANY AREA TO BE DISTURBED AND ADJACENT TO ANY DRAINAGE CHANNELS WITHIN THE DISTURBED AREA . SEDIMENT BARRIERS INCLUDE ANY OF THE FOLLOWING:

FILTER BARRIER FENCE, ALSO CALLED SILT FENCE, SHALL BE INSTALLED WHERE SHOWN ON THE PLANS AND IN ACCORDANCE WITH MANUFACTURERS RECOMMENDATIONS. THE FILTER FABRIC SHALL BE A PERVIOUS SHEET OF PROPYLENE, NYLON, POLYESTER OR ETHYLENE YARN AND SHALL PROVIDE A MINIMUM OF 6 MONTHS USABLE CONSTRUCTION LIFE INCLUDING PROTECTION AGAINST ULTRA-VIOLET LIGHT. THE HEIGHT OF THE FENCE SHALL NOT EXCEED 36 INCHES INSTALLED AND POST SPACING SHALL NOT EXCEED 6 FEET. JOINTS IN THE FENCE SHALL BE AVOIDED TO THE EXTENT POSSIBLE, AND IF NECESSARY SHALL BE SPLICED TOGETHER AT A SUPPORT POST WITH A MINIMUM 6 INCH OVERLAP. A TRENCH SHALL BE EXCAVATED APPROXIMATELY 6 INCHES WIDE AND 6 INCHES DEEP, AND THE BOTTOM 6-8 INCHES OF FABRIC SHALL BE "TOED-IN" TO THE TRENCH AND COMPACTED. THE TRENCH SHOULD BE UPHILL OF THE FABRIC PRIOR TO BURIAL.

EROSION CONTROL MIX BERMS ARE LINEAR BARRIERS COMPOSED OF EROSION CONTROL MIX AS SPECIFIED ABOVE. THE BERM MUST BE A MINIMUM OF 12 INCHES TALL AND 24 INCHES WIDE AT THE BASE IF UPHILL SLOPES ARE LESS THAN 5%. STEEPER SLOPES OR SLOPES GREATER THAN 20 FEET LONG MAY REQUIRE A LARGER WIDTH BERM. EROSION CONTROL MIX BERMS SHALL BE PROHIBITED AT THE BASE OF A LONG OR STEEP SLOPE (8% OR GREATER) WITHOUT THE ADDITIONAL SUPPORT OF A FILTER FENCE INSTALLED ON THE DOWNHILL SIDE OF THE BERM.

SEDIMENT BARRIERS SHOULD BE INSTALLED DOWNGRADIENT OF SOIL OR SEDIMENT STOCKPILES AND STORMWATER PREVENTED RUNNING ONTO THE STOCKPILE. SEDIMENT BARRIERS SHALL BE INSPECTED AFTER ANY SIGNIFICANT RAINFALL EVENT AND REPAIRED IMMEDIATELY IF THERE ARE ANY SIGNS OF EROSION OR SEDIMENTATION BELOW THE BARRIERS. IF THERE ARE SIGNS OF UNDERCUTTING AT THE CENTER OR EDGES OF THE BARRIER, OR IF LARGE VOLUMES OF WATER ARE IMPOUNDED BEHIND THE BARRIER, IT MAY BE NECESSARY TO REPLACE THE BARRIER WITH A TEMPORARY STONE CHECK DAM. SEDIMENT SHALL BE REMOVED ONCE IT REACHES HALF THE BARRIER HEIGHT. AFTER THE BARRIER IS REMOVED, ANY REMAINING SILT SHALL EITHER BE REMOVED OR GRADED TO CONFORM WITH THE EXISTING TOPOGRAPHY AND VEGETATED.

4. STORM DRAIN INLET PROTECTION

STORM DRAIN INLETS THAT ARE MADE OPERATIONAL BEFORE THEIR DRAINAGE AREA IS STABILIZED SHALL BE PROTECTED WITH A FILTER UNTIL THE DRAINAGE AREA IS EITHER PAVED OR STABILIZED WITH 95% VEGETATIVE GROWTH. THE FOLLOWING ARE ACCEPTABLE BMPS ASSOCIATED WITH STORM DRAIN INLET PROTECTION:

MANUFACTURED SEDIMENT FILTERS ARE THE PREFERRED METHOD FOR PROTECTING CATCH BASIN INLETS IN PAVED OR GRAVEL ROADWAYS. THE FILTERS TYPICALLY CONSIST OF A FABRIC OR OTHER PERVIOUS MATERIAL THAT IS PLACED ABOVE OR BELOW THE GRATE THAT TRAPS SEDIMENT ON THE SURFACE AND ALLOWS WATER TO FLOW THROUGH THE GRATE. CONSIDERATIONS SUCH AS WEATHER CONDITIONS, SLOPES, TRIBUTARY WATERSHED AREA AND EXPECTED SEDIMENT ACCUMULATION SHOULD BE FACTORED INTO MAKING A DECISION ON ANY PARTICULAR PRODUCT, AND THE MANUFACTURER'S RECOMMENDATIONS ON INSTALLATION AND MAINTENANCE SHALL BE STRICTLY ADHERED TO.

5. STABILIZED CONSTRUCTION ENTRANCE/EXIT

TO REDUCE THE TRACKING OF SEDIMENT ONTO ROADWAYS, A STABILIZED CONSTRUCTION EXIT SHALL BE INSTALLED AT ALL POINTS OF EGRESS WHERE VEHICLES MAY TRAVEL FROM THE PROJECT SITE TO A PUBLIC ROAD OR OTHER PAVED AREA. THE STONE PAD SHALL CONSIST OF A MINIMUM 6-INCH DEPTH OF 2-3 INCH CRUSHED STONE, AND SHALL BE PLACED ON A GEOTEXTILE FABRIC. THE PAD SHALL EXTEND AT LEAST 50 FEET INTO THE PROJECT SITE AND BE A MINIMUM OF 10 FEET WIDE. THE EXIT SHALL BE MAINTAINED IN A CONDITION THAT WILL PREVENT TRACKING OF SEDIMENT ONTO PUBLIC RIGHTS-OF-WAY, AND THE CONTRACTOR SHALL SWEEP PAVEMENT AT EXITS THAT HAVE EXPERIENCED ANY MUD-TRACKING PRIOR TO THE NEXT STORM EVENT. MAINTAIN THE PAD UNTIL ALL DISTURBED AREAS ARE STABILIZED.

6. DUST CONTROL

THE CONTRACTOR IS RESPONSIBLE FOR CONTROLLING DUST ON THE PROJECT SITE AND ON ADJACENT ROADWAYS. EXPOSED SOIL SURFACES SHALL BE MOISTENED PERIODICALLY WITH ADEQUATE WATER TO CONTROL DUST. GRAVEL SURFACES SHALL EITHER BE TREATED WITH AN APPLICATION OF CALCIUM CHLORIDE OR COVERED WITH CRUSHED STONE IF DUST CONTROL BECOMES DIFFICULT WITH NORMAL WATER APPLICATIONS.

7. LAND GRADING AND SLOPE PREPARATION

GRADING SHALL BE PLANNED SO AS TO MINIMIZE THE LENGTH OF TIME BETWEEN INITIAL SOIL EXPOSURE AND FINAL GRADING. ON LARGE PROJECTS THIS SHOULD BE ACCOMPLISHED BY PHASING THE OPERATION AND COMPLETING THE FIRST PHASE UP TO FINAL GRADING AND SEEDING BEFORE STARTING THE NEXT PHASE. ANY EXPOSED AREA THAT WILL NOT BE FINISH GRADED WITHIN 7 DAYS SHALL BE TREATED WITH MULCH OR PLANTED WITH TEMPORARY VEGETATION. PROVISIONS SHALL BE MADE TO SAFELY CONVEY SURFACE RUNOFF TO STORM DRAINS, PROTECTED OUTLETS OR TO STABLE WATER COURSES TO ENSURE THAT SURFACE RUNOFF WILL NOT DAMAGE SLOPES OR OTHER GRADED AREAS. CUT AND FILL SLOPES THAT ARE TO BE STABILIZED WITH GRASS SHALL NOT BE STEEPER THAN 2:1. AREAS TO BE FILLED SHALL BE CLEARED, GRUBBED AND STRIPPED OF TOPSOIL TO REMOVE TREES, VEGETATION, ROOTS OR OTHER OBJECTIONABLE MATERIALS. AREAS SHALL BE SCARIFIED TO A MINIMUM DEPTH OF 3 INCHES PRIOR TO PLACEMENT OF TOPSOIL. ALL FILLS SHALL BE COMPACTED AS REQUIRED TO REDUCE EROSION, SLIPPAGE, SETTLEMENT, SUBSIDENCE OR OTHER RELATED PROBLEMS. FILL INTENDED TO SUPPORT BUILDINGS, STRUCTURES AND CONDUITS, ETC. SHALL BE COMPACTED IN ACCORDANCE WITH LOCAL REQUIREMENTS OR CODES. ALL FILLS SHALL BE PLACED AND COMPACTED IN LAYERS NOT TO EXCEED 8 INCHES IN THICKNESS. FILL MATERIAL SHALL BE FREE OF STUMPS, BUILDING DEBRIS AND OTHER OBJECTIONABLE MATERIALS THAT WOULD INTERFERE WITH OR PREVENT CONSTRUCTION OF SATISFACTORY LIFTS. FROZEN MATERIAL OR SOFT, MUCKY OR HIGHLY COMPRESSIBLE MATERIALS SHALL NOT BE INCORPORATED INTO FILL SLOPES OR STRUCTURAL FILLS. FILL SHALL NOT BE PLACED ON A FROZEN FOUNDATION. SEEPS OR SPRINGS ENCOUNTERED DURING CONSTRUCTION SHALL BE HANDLED APPROPRIATELY. ALL GRADED AREAS SHALL BE PERMANENTLY STABILIZED IMMEDIATELY FOLLOWING FINISHED GRADING.

8. TOPSOIL

IF POSSIBLE, TOPSOIL SHALL BE STOCKPILED ON THE PROJECT SITE AND REUSED. HIGH QUALITY TOPSOIL SHALL BE FRIABLE AND LOAMY (LOAM, SANDY LOAM, SILT LOAM, SANDY CLAY LOAM, CLAY LOAM), AND SHALL BE FREE OF DEBRIS, TRASH, STUMPS, ROCKS, ROOTS AND NOXIOUS WEEKS. AFTER THE AREAS TO BE TOPSOILED HAVE BEEN BROUGHT TO GRADE, AND IMMEDIATELY PRIOR TO SPREADING THE TOPSOIL, THE SUBGRADE SHALL BE LOOSENED BY SCARIFYING TO A DEPTH OF AT LEAST 2 INCHES TO ENSURE BONDING WITH SUBSOIL. THE TOPSOIL SHALL BE UNIFORMLY DISTRIBUTED TO A MINIMUM COMPACTED DEPTH OF 4 INCHES. ANY IRREGULARITIES IN THE SURFACE RESULTING FROM TOPSOILING OR OTHER OPERATIONS SHALL BE CORRECTED IN ORDER TO PREVENT THE FORMATION OF DEPRESSIONS OR WATER POCKETS. IT IS NECESSARY TO COMPACT THE TOPSOIL ENOUGH TO ENSURE GOOD CONTACT WITH THE UNDERLYING SOIL, BUT UNDUE COMPACTION IS TO BE AVOIDED.

9. PERMANENT SOIL STABILIZATION

IF THE AREA WILL NOT BE WORKED FOR MORE THAN ONE YEAR OR HAS BEEN BROUGHT TO FINAL GRADE, THEN PERMANENTLY STABILIZE THE AREA WITHIN 7 DAYS BY PLANTING VEGETATION, SEEDING, SOD, OR THROUGH THE USE OF PERMANENT MULCH, OR RIPRAP, OR ROAD SUB-BASE. IF USING VEGETATION FOR STABILIZATION, SELECT THE PROPER VEGETATION FOR THE LIGHT, MOISTURE, AND SOIL CONDITIONS; AMEND AREAS OF DISTURBED SUBSOILS WITH TOPSOIL, COMPOST, OR FERTILIZERS; PROTECT SEEDED AREAS WITH MULCH OR, IF NECESSARY, EROSION CONTROL BLANKETS; AND SCHEDULE SODDING, PLANTING, AND SEEDING SO TO AVOID DIE-OFF FROM SUMMER DROUGHT AND FALL FROSTS. NEWLY SEEDED OR SODDED AREAS MUST BE PROTECTED FROM VEHICLE TRAFFIC, EXCESSIVE PEDESTRIAN TRAFFIC, AND CONCENTRATED RUNOFF UNTIL THE VEGETATION IS WELL-ESTABLISHED WITH 90% COVER BY HEALTHY VEGETATION. IF NECESSARY, AREAS MUST BE REWORKED AND RESTABILIZED IF GERMINATION IS SPARSE, PLANT COVERAGE IS SPOTTY, OR TOPSOIL EROSION IS EVIDENT. ONE OR MORE OF THE FOLLOWING MAY APPLY TO A PARTICULAR SITE.

SEEDED AREAS: TO PREPARE THE SEEDBED, APPLY 10-20-20 FERTILIZER AT A RATE OF 800 POUNDS PER ACRE AND GROUND LIMESTONE AT A RATE OF 3 TONS PER ACRE. WORK THE FERTILIZER AND LIMESTONE INTO THE TOPSOIL TO A DEPTH OF 4 INCHES AND REMOVE ANY STONES, ROOTS OR OTHER VISIBLE DEBRIS. SELECT A SEED MIXTURE THAT IS APPROPRIATE FOR THE SOIL TYPE AND MOISTURE CONTENT AS FOUND AT THE SITE, AND FOR THE AMOUNT OF SUN EXPOSURE AND FOR LEVEL OF USE. REFER TO THE USDA SOIL CONSERVATION SERVICE OR THE LOCAL SOIL AND WATER CONSERVATION DISTRICT FOR APPROPRIATE SEED MIXTURES. APPLY SEED UNIFORMLY IN ACCORDANCE WITH SUPPLIER RECOMMENDATIONS AND IMMEDIATELY COVER WITH MULCH AS DESCRIBED IN THE TEMPORARY MULCHING SECTION OF THIS PLAN.

HYDROSEEDING SHALL BE DONE IN ACCORDANCE WITH SUPPLIERS RECOMMENDATIONS. FOR SEEDED AREAS TO BE PERMANENTLY STABILIZED, 90% OF THE DISTURBED SOIL SHALL BE COVERED WITH MATURE HEALTHY PLANTS WITH NO EVIDENCE OF WASHING OR RILLING OF THE TOPSOIL.

SOD STRIPS SHALL BE LAID AT RIGHT ANGLES TO DIRECTION OF SLOPE OR FLOW OF WATER STARTING AT LOWEST ELEVATION. JOINTS SHALL BE STAGGERED, AND ALL STRIPS SHALL BE ROLLED OR TAMPED INTO PLACE. ON SLOPES, SOD SHALL BE ANCHORED WITH STAPLES, WIRE OR PINS. IRRIGATE SODDED AREA IMMEDIATELY AFTER INSTALLATION. FOR SODDED AREAS TO BE PERMANENTLY STABILIZED, THE ROOTS OF THE SOD MUST BE COMPLETELY BOUND INTO THE UNDERLYING SOIL WITH NO SLUMPING OF THE SOD OR DIE-OFF.

PERMANENT MULCH IS A LONG TERM COVER THAT PROVIDES A GOOD BUFFER AROUND DISTURBED AREAS. THE EROSION CONTROL MIX SHALL CONSIST PRIMARILY OF ORGANIC MATERIAL AND MAY INCLUDE SHREDDED BARK, STUMP GRINDINGS OR COMPOSTED BARK. WOOD CHIPS, GROUND CONSTRUCTION DEBRIS, REPROCESSED WOOD PRODUCTS OR BARK CHIPS ARE NOT ACCEPTABLE. THE EROSION CONTROL MIX SHALL CONTAIN A WELL-GRADED MIXTURE OF PARTICLE SIZES AND MAY CONTAIN ROCKS LESS THAN 4 INCHES IN DIAMETER. EROSION CONTROL MIX MUST BE FREE OF REFUSE, PHYSICAL CONTAMINANTS AND MATERIAL TOXIC TO PLANT GROWTH.

RIPRAP STONE SHALL CONSIST OF SUB-ANGULAR FIELD STONE OR ROUGH UNEVEN QUARRY STONE OF APPROXIMATELY RECTANGULAR SHAPE. THE DEPTH OF STONE SHALL BE A MINIMUM OF 2.2 TIMES THE MAXIMUM STONE DIAMETER. A GRAVEL OR GEOTEXTILE FILTER BLANKET SHALL BE PLACED BETWEEN THE RIPRAP AND UNDERLYING SOIL SURFACE. GRAVEL FILTER BLANKETS SHALL MEET MDOT TYPE-C UNDERDRAIN MATERIAL SPECIFICATIONS AND BE AT LEAST 6 INCHES THICK. GEOTEXTILE FILTER BLANKETS SHALL BE SPECIFIED BASED ON SITE CONDITIONS. RIPRAP SLOPES SHALL BE TOED INTO THE BASE OF THE EMBANKMENT BY EXCAVATING A TRENCH AT THE BOTTOM OF THE SLOPE AND INSTALLING A STABLE BASE OF RIPRAP TO GRADE.

DITCHES, CHANNELS AND SWALES ARE CONSIDERED PERMANENTLY STABILIZED WHEN THE CHANNEL HAS 90% COVER OF HEALTHY VEGETATION WITH A WELL GRADED RIPRAP LINING, EROSION CONTROL BLANKET, OR WITH ANOTHER NON-EROSIVE LINING SUCH AS CONCRETE OR ASPHALT PAVEMENT. THERE MUST BE NO EVIDENCE OF SLUMPING OF THE CHANNEL LINING, UNDERCUTTING OF THE BANKS, OR DOWNCUTTING OF THE CHANNEL.

10. STORMWATER CHANNELS

EACH CHANNEL SHOULD BE CONSTRUCTED IN SECTIONS SO THAT THE SECTION'S GRADING, SHAPING, AND INSTALLATION OF THE PERMANENT LINING CAN BE COMPLETED THE SAME DAY. IF A CHANNEL'S FINAL GRADING OR LINING INSTALLATION MUST BE DELAYED, THEN DIVERSION BERMS MUST BE USED TO DIVERT STORMWATER AWAY FROM THE CHANNEL, PROPERLY-SPACED CHECK DAMS MUST BE INSTALLED IN THE CHANNEL TO SLOW THE WATER VELOCITY, AND A TEMPORARY LINING INSTALLED ALONG THE CHANNEL TO PREVENT SCOURING.

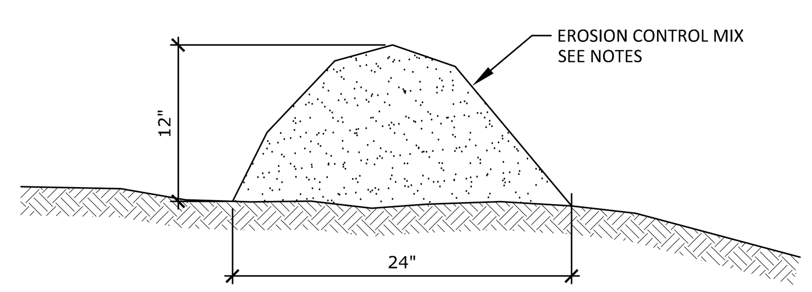

NOTES:
1. EROSION CONTROL MIX BERM INSTALLED 12" HIGH AND 24" WIDE CONSISTING OF STUMP GRINDINGS WITH NO ROCKS GREATER THAN 4" OR LARGE AMOUNTS OF FINES.

EROSION CONTROL MIX BERM

NOT TO SCALE

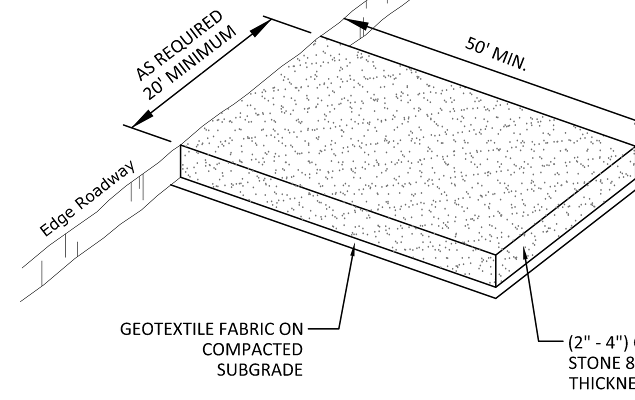

STABILIZED CONSTRUCTION ENTRANCE

NOT TO SCALE

WINTER EROSION AND SEDIMENTATION CONTROL NOTES:

THE WINTER CONSTRUCTION PERIOD TYPICALLY BEGINS IN EARLY NOVEMBER AND ENDS IN MID APRIL. IF A CONSTRUCTION SITE IS NOT STABILIZED WITH PAVEMENT, A ROAD GRAVEL BASE OR RIPRAP BY NOVEMBER 15 THEN THE SITE NEEDS TO BE PROTECTED WITH OVER-WINTER STABILIZATION. WINTER EXCAVATION AND EARTHWORK SHALL BE COMPLETED SUCH THAT NO MORE THAN 1 ACRE OF THE SITE IS WITHOUT STABILIZATION AT ANY ONE TIME. LIMIT THE EXPOSED AREA TO THOSE AREAS IN WHICH WORK IS TO OCCUR DURING THE FOLLOWING 15 DAYS AND THAT CAN BE MULCHED IN ONE DAY PRIOR TO ANY SNOW EVENT. AN AREA SHALL BE CONSIDERED DENUDED UNTIL THE SUBBASE GRAVEL IS INSTALLED IN THE ROADWAY AREAS OR THE AREAS OF FUTURE LOAM AND SEED HAVE BEEN LOAMED, SEEDED AND MULCHED. A COVER OF EROSION CONTROL MIX IS THE PREFERRED TEMPORARY MULCH DURING WINTER CONDITIONS.

1. NATURAL RESOURCE PROTECTION

ANY AREAS WITHIN 75 FEET FROM ANY REGULATED NATURAL RESOURCES SHALL BE MULCHED BY DECEMBER 1 AND ANCHORED WITH PLASTIC NETTING OR PROTECTED WITH AN EROSION CONTROL COVER. DURING WINTER CONSTRUCTION, A DOUBLE ROW OF SEDIMENT BARRIERS (FOR EXAMPLE, SILT FENCE BACKED WITH HAY BALES OR EROSION CONTROL MIX) WILL BE PLACED BETWEEN ANY REGULATED NATURAL RESOURCE AND THE DISTURBED AREA. PROJECTS CROSSING THE REGULATED NATURAL RESOURCE SHALL BE PROTECTED A MINIMUM DISTANCE OF 100 FEET ON EITHER SIDE FROM THE RESOURCE. EXISTING PROJECTS NOT STABILIZED BY DECEMBER 1 SHALL BE PROTECTED WITH THE SECOND LINE OF SEDIMENT BARRIER TO ENSURE FUNCTIONALITY DURING THE SPRING THAW AND RAINS.

2. SEDIMENT BARRIERS

DURING FROZEN CONDITIONS, SEDIMENT BARRIERS MAY CONSIST OF EROSION CONTROL MIX BERMS OR ANY OTHER RECOGNIZED SEDIMENT BARRIERS AS FROZEN SOIL PREVENTS THE PROPER INSTALLATION OF HAY BALES OR SILT FENCES.

3. MULCHING

ALL AREAS SHALL BE CONSIDERED TO BE DENUDED UNTIL SEEDED AND MULCHED. HAY AND STRAW MULCH SHALL BE APPLIED AT A RATE OF 3 TONS PER ACRE (TWICE THE NORMAL ACCEPTED RATE) AND SHALL BE PROPERLY ANCHORED. EROSION CONTROL MIX MUST BE APPLIED WITH A MINIMUM 4 INCHES THICKNESS. MULCH SHALL NOT BE SPREAD ON TOP OF SNOW. SNOW MUST BE REMOVED DOWN TO A ONE-INCH DEPTH PRIOR TO APPLICATION. AFTER EACH DAY OF FINAL GRADING, THE AREA WILL BE PROPERTY STABILIZED WITH ANCHORED HAY OR STRAW OR EROSION CONTROL MATTING. AN AREA SHALL BE CONSIDERED TO HAVE BEEN STABILIZED WHEN EXPOSED SURFACES HAVE BEEN EITHER MULCHED OR ADEQUATELY ANCHORED SO THAT GROUND SURFACE IS NOT VISIBLE THROUGH THE MULCH. BETWEEN THE DATES OF NOVEMBER 1 AND APRIL 15, ALL MULCH SHALL BE ANCHORED BY EITHER MULCH NETTING, TRACKING OR WOOD CELLULOSE FIBER. THE COVER WILL BE CONSIDERED SUFFICIENT WITH THE GROUND SURFACE IS NOT VISIBLE THROUGH THE MULCH. AFTER NOVEMBER 1ST, MULCH AND ANCHORING OF ALL EXPOSED SOIL SHALL OCCUR AT THE END OF EACH FINAL GRADING WORKDAY.

4. SOIL STOCKPILING

STOCKPILES OF SOIL OR SUBSOIL WILL BE MULCHED FOR OVER WINTER PROTECTION WITH HAY OR STRAW AT TWICE THE NORMAL RAT EOR WITH A FOUR-INCH LAYER OF EROSION CONTROL MIX. THIS WILL BE DONE WITHIN 24 HOURS OF STACKING AND RE-ESTABLISHED PRIOR TO ANY RAINFALL OR SNOWFALL. ANY SOIL STOCKPILE WILL NOT BE PLACED WITHIN 100 FEET FROM ANY REGULATED NATURAL RESOURCE.

5. SEEDING

BETWEEN THE DATES OF OCTOBER 15 AND APRIL 1, LOAM OR SEED WILL NOT BE REQUIRED. DURING PERIODS OF ABOVE FREEZING TEMPERATURES FINISHED AREAS SHALL BE FINE GRADED AND EITHER PROTECTED MULCH OR TEMPORARILY SEEDED AND MULCHED UNTIL SUCH TIME AS THE FINAL TREATMENT CAN BE APPLIED. IF THE DATE IS AFTER NOVEMBER 1 AND IF THE EXPOSED AREA HAS BEEN LOOMED, FINAL GRADED WITH A UNIFORM SURFACE, THEN THE AREA MAY BE DORMANT SEEDED AT A RATE OF 3 TIMES HIGHER THAN SPECIFIED FOR PERMANENT SEED AND THEN MULCHED. IF DORMANT SEEDING IS USED, ALL DISTURBED AREAS SHALL RECEIVE 4 INCHES OF LOAM AND SEED AT AN APPLICATION RATE OF 5 LBS PER 1,000 S.F. ALL AREAS INSUFFICIENTLY VEGETATED (LESS THAN 75%) IN THE SPRING SHALL BE REVEGETATED.

6. OVER-WINTER STABILIZATION OF DITCHES AND CHANNELS

ALL STONE-LINED DITCHES AND CHANNELS MUST BE CONSTRUCTED BY NOVEMBER 1. ALL GRASS-LINED DITCHES AND CHANNELS MUST BE CONSTRUCTED AND STABILIZED BY SEPTEMBER 1. IF A GRASS-LINED DITCH OR CHANNEL IS STABILIZED BY SEPTEMBER 1, THEN EITHER A SOD LINING SHALL BE INSTALLED PRIOR TO OCTOBER 1 OR THE DITCH MUST BE LINED WITH STONE RIPRAP BACKED BY AN APPROPRIATE GRAVEL BED OR GEOTEXTILE PRIOR TO NOVEMBER 1.

7. OVER-WINTER STABILIZATION OF DISTURBED SLOPES

ALL STONE-COVERED SLOPES MUST BE CONSTRUCTED AND STABILIZED BY NOVEMBER 15. ALL SLOPES TO BE VEGETATED MUST BE SEEDED AND MULCHED BY SEPTEMBER 1. ALL AREAS HAVING A GRADE STEEPER THAN 8% SHALL BE CONSIDERED A SLOPE. IF A SLOPE TO BE VEGETATED IS NOT STABILIZED BY SEPTEMBER 1, THEN THE SLOPE SHALL EITHER BE STABILIZED WITH TEMPORARY VEGETATION AND EROSION CONTROL MATS BY OCTOBER 1, SOD BY OCTOBER 1, EROSION CONTROL MIX BY NOVEMBER 1 OR STONE RIPRAP BY NOVEMBER 15. SEE APPLICABLE SECTIONS UNDER EROSION AND SEDIMENTATION CONTROL NOTES FOR PROPER INSTALLATION METHODS.

8. OVER-WINTER STABILIZATION OF DISTURBED SOILS

BY SEPTEMBER 15, ALL DISTURBED SOILS ON AREAS HAVING A SLOPE LESS THAN 15% MUST BE SEEDED AND MULCHED. IF THE DISTURBED AREAS ARE NOT STABILIZED BY THIS DATE, THEN THE AREA SHALL EITHER BE STABILIZED WITH TEMPORARY VEGETATION BY OCTOBER 1, SOD BY OCTOBER 1, OR MULCH BY NOVEMBER 15. SEE APPLICABLE SECTIONS UNDER EROSION AND SEDIMENTATION CONTROL NOTES FOR PROPER INSTALLATION METHODS.

9. MAINTENANCE

MAINTENANCE MEASURES SHALL BE APPLIED AS NEEDED DURING THE ENTIRE CONSTRUCTION SEASON. AFTER EACH RAINFALL, SNOW STORM, PERIOD OF THAWING AND RUNOFF AND AT LAST ONCE A WEEK, THE SITE CONTRACTOR SHALL PERFORM A VISUAL INSPECTION OF ALL INSTALLED EROSION CONTROL MEASURES AND PERFORM REPAIRS AS NEEDED TO INSURE THEIR CONTINUOUS FUNCTION. FOLLOWING THE TEMPORARY AND/OR FINAL SEEDING AND MULCHING, THE CONTRACTOR SHALL, IN THE SPRING, INSPECT AND REPAIR ANY DAMAGES AND/OR BARE SPOTS. AN ESTABLISHED VEGETATIVE COVER MEANS A MINIMUM OF 85% OF AREAS VEGETATED WITH VIGOROUS GROWTH.

PRELIMINARY PLAN NOT FOR CONSTRUCTION

STATE OF MAINE
JAYSON R. HASKELL
No. 13002
LICENSED PROFESSIONAL ENGINEER
11-18-19

DM ROMA
CONSULTING ENGINEERS
P.O. BOX 1116
WINDHAM, ME 04062
(207) 310 - 0506

REV	DATE	BY	DESCRIPTION
A	11-18-19	DMR	ISSUED FOR PRELIMINARY SUBDIVISION REVIEW

DETAILS

DEPOT STREET RESIDENTIAL DEVELOPMENT

DEPOT STREET
WINDHAM, MAINE

FOR RECORD OWNER:
MCL REALTY, LLC
PO BOX 1206
WINDHAM, ME 04062

17035
JOB NUMBER:

AS NOTED
SCALE:

11-18-2019
DATE:

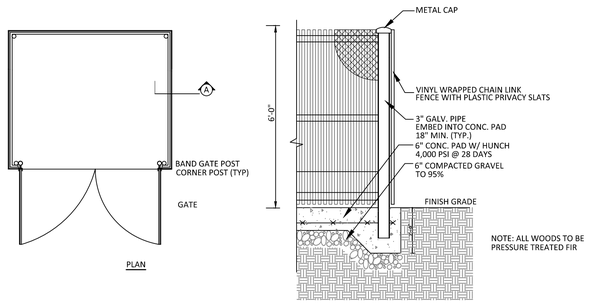

DUMPSTER SCREEN
NOT TO SCALE

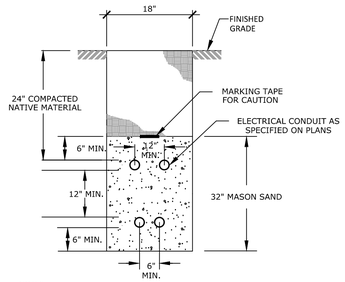

NOTES:
1. ALL CONDUITS SHALL BE 4" DIA. PVC SCH 40 EXCEPT FOR ROAD CROSSINGS SHALL BE PVC SCH 80
2. INSTALLATION SHOULD NOT ALLOW THE INTER-TWINING OF CABLES.
3. BEDDING AND BACKFILL SHALL BE FREE OF ROOTS, STUMPS AND OTHER DEBRIS.
4. COMMUNICATION CABLE AND POWER CABLE SHALL HAVE NO LESS THAN 12 INCHES OF RADIAL SEPARATION.

TRENCH DETAIL - ELECTRICAL CONDUIT
NOT TO SCALE

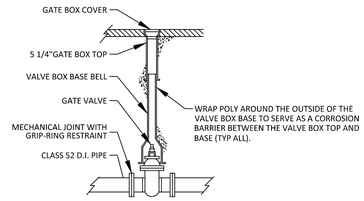

GATE VALVE
NOT TO SCALE

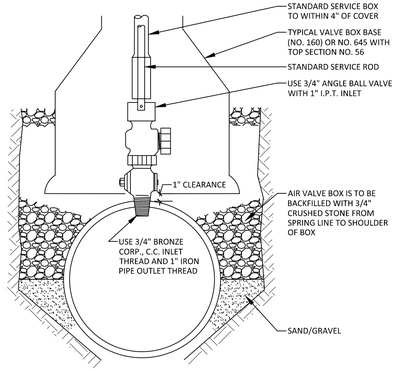

TYPICAL AIR VALVE (1")
NOT TO SCALE

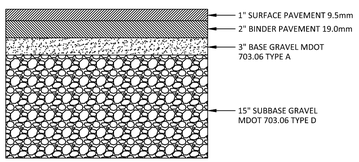

TYPICAL PAVEMENT SECTION
NOT TO SCALE

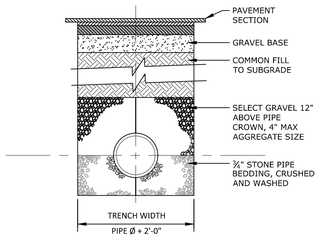

TYPICAL TRENCH SECTION
NOT TO SCALE

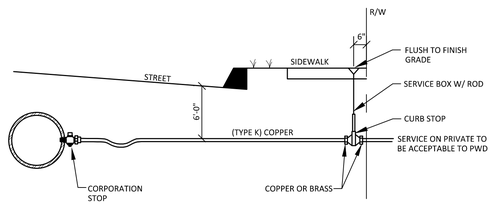

TYPICAL SERVICE CONNECTION
NOT TO SCALE

CONCRETE THRUST BLOCK SIZE REQUIREMENTS				
		SQ. FT. OF BEARING ON UNDISTURBED SOIL		
FITTINGS		90°BENDS	45°BENDS	TEES AND PLUGS
PIPE SIZE	6"	4.0	2.0	3.0
	8"	8.0	4.0	6.0
	12"	15	9	12
	16"	26	14	19
	20"	40	22	28

BASED ON SOIL BEARING PRESSURE OF 2000PSF AND 100PSI LINE PRESSURE. COMPACT COURSE TO FINE SANDS AND CLAYS REQUIRE ENGINEERED BLOCKS. ENGINEERED BLOCKS WILL TYPICALLY REQUIRE REINFORCING STEEL OF #5 AT 12".

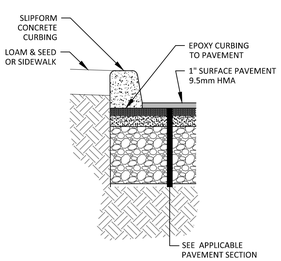

TYPICAL CURB SECTION
NOT TO SCALE

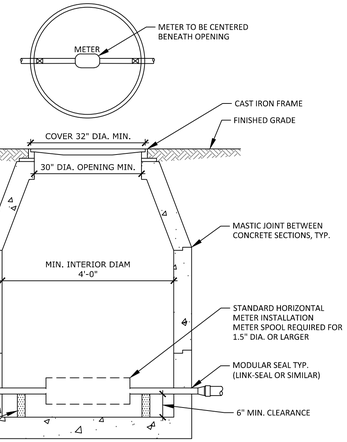

METER PIT AND COVER NOTES:

1. SPECIAL APPROVAL BY PWD IS REQUIRED, PRIOR TO CONSTRUCTION, FOR ALL PROPOSED METER PIT INSTALLATIONS.
2. BACKFLOW PREVENTION DEVICES MAY NOT BE INSTALLED WITHIN SMALL METER PITS.
3. A METER PIT MAY HOUSE UP TO TWO 5/8", 3/4" OR 1" METERS WITH PRIOR APPROVAL FROM PWD.
4. METER PIT SHALL BE LOCATED ON PRIVATE PROPERTY BETWEEN 10' AND 20' FROM PROPERTY LINE UNLESS OTHERWISE APPROVED BY PWD.
5. THE METER PIT SHALL BE MADE OF PRECAST CONCRETE OF SUFFICIENT SIZE TO PROVIDE 5.5' MIN. GROUND COVER FROM FINISHED GRADE TO THE TOP OF THE SERVICE PIPE.
6. ALL SEAMS BETWEEN CONCRETE SECTIONS SHALL BE SEALED WITH MASTIC JOINT. ALL OPENINGS IN THE CONCRETE FOR SERVICE PIPING SHALL BE SEALED WITH A MODULAR SEAL (LINK-SEAL OR SIMILAR).
7. METER PIT INTERIOR MUST BE AT LEAST 48" IN DIAMETER. THE OPENING MUST BE AT LEAST 30" IN DIAMETER, WITH A CAST IRON FRAME. THE COVER SHALL BE CAST IRON OR STEEL, 32" MIN. IN DIAMETER, AND BE EITHER PERMANENTLY LABELED "WATER" OR HAVE NO LABEL. STEEL PLATE MATERIAL SHALL BE COATED WITH A RUST INHIBITOR PAINT.
8. WALL-MOUNTED LADDER RUNGS ARE NOT TO BE INSTALLED WITHIN METER PIT.
9. ALL PIPING INSIDE AND EXTENDING THROUGH THE METER PIT WILL BE MADE OF COPPER, WITH A MIN. OF 6" CLEARANCE FROM THE METER PIT FLOOR. USE BLOCKING AS NEEDED TO SUPPORT THE PIPE.
10. CUSTOMER SHALL ENSURE THE METER PIT AND COVER ARE PROPERLY RATED FOR TRAFFIC FLOW, IF APPLICABLE

METER INSTALLATION NOTES:

11. ONLY PWD PERSONNEL ARE AUTHORIZED TO INSTALL WATER METERS. PWD PERSONNEL ARE ADDITIONALLY AUTHORIZED TO OPERATE METER VALVES AS NEEDED FOR INSTALLATION AND MAINTENANCE.
12. PWD WILL SUPPLY THE WATER METER. ALL OTHER FITTINGS, INCLUDING A METER RESETTER FOR 1" OR SMALLER METERS SHALL BE SUPPLIED AND INSTALLED BY CUSTOMER.
13. FOR 1.5" AND 2" METERS, CUSTOMER WILL INSTALL A FLANGED METER SPOOL PIECE SUPPLIED BY PWD AT NO ADDITIONAL CHARGE, PRIOR TO METER SET. THE METER SPOOL WILL BE MADE AVAILABLE FOR CUSTOMER PICKUP AT PWD CUSTOMER SERVICE, 225 DOUGLAS STREET, PORTLAND DURING NORMAL BUSINESS HOURS.
14. CUSTOMER WILL INSTALL TWO BALL VALVES AT LEAST 24" APART FOR METER INSTALLATION, ALLOWING FOR THE WATER METER TO BE CENTERED UNDER THE METER PIT OPENING. THE BALL VALVES SHALL BE SOLDERED IN PLACE.

SMALL METER PIT (5/8" TO 2" METER)
NOT TO SCALE

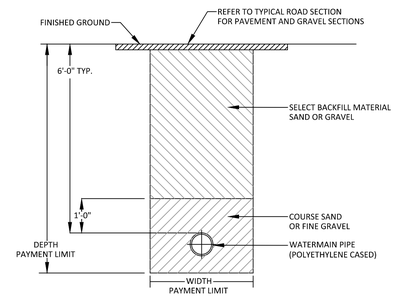

WATERMAIN TYPICAL TRENCH CROSS-SECTION
NOT TO SCALE

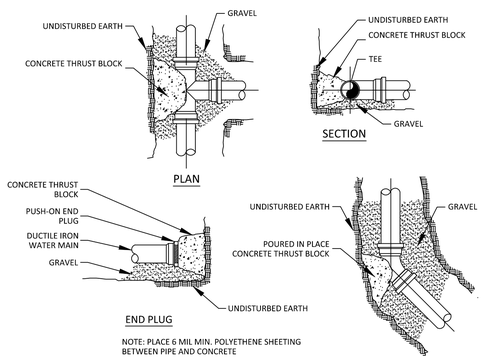

THRUST BLOCK DETAIL
NOT TO SCALE

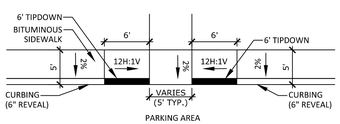

PEDESTRIAN / DRIVEWAY RAMP DETAIL OPTION 1
NOT TO SCALE

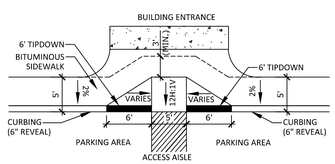

PEDESTRIAN / DRIVEWAY RAMP DETAIL OPTION 2
NOT TO SCALE

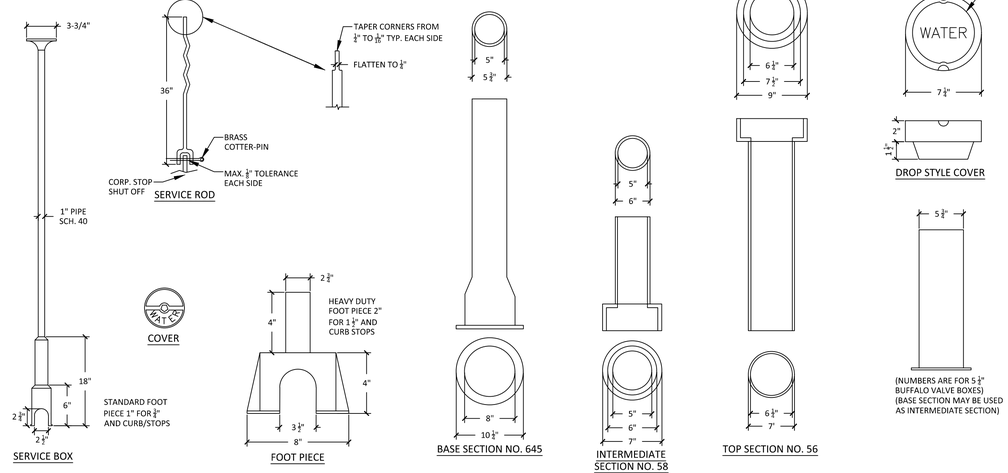

VALVE BOX & COVER
NOT TO SCALE

PRELIMINARY PLAN NOT FOR CONSTRUCTION

STATE OF MAINE JAYSON R. HASKELL No. 13002 LICENSED PROFESSIONAL ENGINEER 11-18-19

DM ROMA
CONSULTING ENGINEERS
P.O. BOX 1116
WINDHAM, ME 04062
(207) 310 - 0506

REV	DATE	BY	DESCRIPTION
A	11-18-19	DMR	ISSUED FOR PRELIMINARY SUBDIVISION REVIEW

DETAILS

DEPOT STREET RESIDENTIAL DEVELOPMENT

DEPOT STREET
WINDHAM, MAINE

FOR RECORD OWNER:
MCL REALTY, LLC
PO BOX 1206
WINDHAM, ME 04062

17035	JOB NUMBER:
AS NOTED	SCALE:
11-18-2019	DATE:
SHEET 7 OF 8	
D-2	

	MATERIAL LOCATION	DESCRIPTION	AASHTO MATERIAL CLASSIFICATIONS	COMPACTION / DENSITY REQUIREMENT
D	**FINAL FILL:** FILL MATERIAL FOR LAYER 'D' STARTS FROM THE TOP OF THE 'C' LAYER TO THE BOTTOM OF FLEXIBLE PAVEMENT OR UNPAVED FINISHED GRADE ABOVE. NOTE THAT PAVEMENT SUBBASE MAY BE PART OF THE 'D' LAYER	ANY SOIL/ROCK MATERIALS, NATIVE SOILS, OR PER ENGINEER'S PLANS. CHECK PLANS FOR PAVEMENT SUBGRADE REQUIREMENTS.	N/A	PREPARE PER SITE DESIGN ENGINEER'S PLANS. PAVED INSTALLATIONS MAY HAVE STRINGENT MATERIAL AND PREPARATION REQUIREMENTS.
C	**INITIAL FILL:** FILL MATERIAL FOR LAYER 'C' STARTS FROM THE TOP OF THE EMBEDMENT STONE ('B' LAYER) TO 18" (450 mm) ABOVE THE TOP OF THE CHAMBER. NOTE THAT PAVEMENT SUBBASE MAY BE A PART OF THE 'C' LAYER.	GRANULAR WELL-GRADED SOIL/AGGREGATE MIXTURES, <35% FINES OR PROCESSED AGGREGATE. MOST PAVEMENT SUBBASE MATERIALS CAN BE USED IN LIEU OF THIS LAYER.	AASHTO M145[5] A-1, A-2-4, A-3 OR AASHTO M43[5] 3, 357, 4, 467, 5, 56, 57, 6, 67, 68, 7, 78, 8, 89, 9, 10	BEGIN COMPACTIONS AFTER 12" (300 mm) OF MATERIAL OVER THE CHAMBERS IS REACHED. COMPACT ADDITIONAL LAYERS IN 6" (150 mm) MAX LIFTS TO A MIN. 95% PROCTOR DENSITY FOR WELL GRADED MATERIAL AND 95% RELATIVE DENSITY FOR PROCESSED AGGREGATE MATERIALS. ROLLER GROSS VEHICLE WEIGHT NOT TO EXCEED 12,000 lbs (53 kN). DYNAMIC FORCE NOT TO EXCEED 20,000 lbs (89 kN).
B	**EMBEDMENT STONE:** FILL SURROUNDING THE CHAMBERS FROM THE FOUNDATION STONE ('A' LAYER) TO THE 'C' LAYER ABOVE.	CLEAN, CRUSHED, ANGULAR STONE	AASHTO M43[5] 3, 357, 4, 467, 5, 56, 57	NO COMPACTION REQUIRED.
A	**FOUNDATION STONE:** FILL BELOW CHAMBERS FROM THE SUBGRADE UP TO THE FOOT (BOTTOM) OF THE CHAMBER.	CLEAN, CRUSHED, ANGULAR STONE	AASHTO M43[5] 3, 357, 4, 467, 5, 56, 57	PLATE COMPACT OR ROLL TO ACHIEVE A FLAT SURFACE. [2 3]

PLEASE NOTE:
1. THE LISTED AASHTO DESIGNATIONS ARE FOR GRADATIONS ONLY. THE STONE MUST ALSO BE CLEAN, CRUSHED, ANGULAR. FOR EXAMPLE, A SPECIFICATION FOR #4 STONE WOULD STATE: "CLEAN, CRUSHED, ANGULAR NO. 4 (AASHTO M43) STONE".
2. STORMTECH COMPACTION REQUIREMENTS ARE MET FOR 'A' LOCATION MATERIALS WHEN PLACED AND COMPACTED IN 6" (150 mm) (MAX) LIFTS USING TWO FULL COVERAGES WITH A VIBRATORY COMPACTOR.
3. WHERE INFILTRATION SURFACES MAY BE COMPROMISED BY COMPACTION, FOR STANDARD DESIGN LOAD CONDITIONS, A FLAT SURFACE MAY BE ACHIEVED BY RAKING OR DRAGGING WITHOUT COMPACTION EQUIPMENT. FOR SPECIAL LOAD DESIGNS, CONTACT STORMTECH FOR COMPACTION REQUIREMENTS.

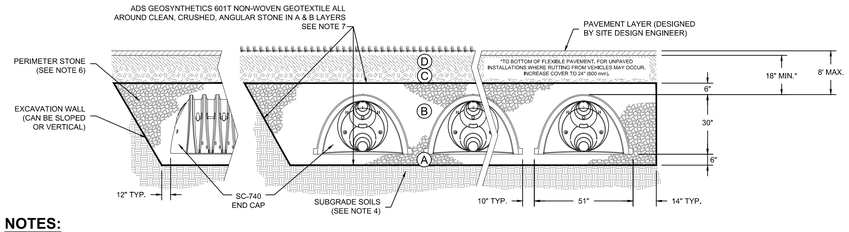

NOTES:

1. SC-740 CHAMBERS SHALL CONFORM TO THE REQUIREMENTS OF ASTM F2418 "STANDARD SPECIFICATION FOR POLYPROPYLENE (PP) CORRUGATED WALL STORMWATER COLLECTION CHAMBERS", OR ASTM F2922 "STANDARD SPECIFICATION FOR POLYETHYLENE (PE) CORRUGATED WALL STORMWATER COLLECTION CHAMBERS".
2. SC-740 CHAMBERS SHALL BE DESIGNED IN ACCORDANCE WITH ASTM F2787 "STANDARD PRACTICE FOR STRUCTURAL DESIGN OF THERMOPLASTIC CORRUGATED WALL STORMWATER COLLECTION CHAMBERS".
3. "ACCEPTABLE FILL MATERIALS" TABLE ABOVE PROVIDES MATERIAL LOCATIONS, DESCRIPTIONS, GRADATIONS, AND COMPACTION REQUIREMENTS FOR FOUNDATION, EMBEDMENT, AND FILL MATERIALS.
4. THE SITE DESIGN ENGINEER IS RESPONSIBLE FOR ASSESSING THE BEARING RESISTANCE (ALLOWABLE BEARING CAPACITY) OF THE SUBGRADE SOILS AND THE DEPTH OF FOUNDATION STONE WITH CONSIDERATION FOR THE RANGE OF EXPECTED SOIL MOISTURE CONDITIONS.
5. PERIMETER STONE MUST BE EXTENDED HORIZONTALLY TO THE EXCAVATION WALL FOR BOTH VERTICAL AND SLOPED EXCAVATION WALLS.
6. ONCE LAYER 'C' IS PLACED, ANY SOIL/MATERIAL CAN BE PLACED IN LAYER 'D' UP TO THE FINISHED GRADE. MOST PAVEMENT SUBBASE SOILS CAN BE USED TO REPLACE THE MATERIAL REQUIREMENTS OF LAYER 'C' OR 'D' AT THE SITE DESIGN ENGINEER'S DISCRETION.
7. IF DURING CONSTRUCTION, LEDGE OR HIGH GROUNDWATER TABLE IS ENCOUNTERED, CONTRACTOR TO REPLACE NON-WOVEN GEOSYNTHETIC WITH A 30mil PVC LINER.

STORMTECH SC-740 CROSS SECTION
NOT TO SCALE

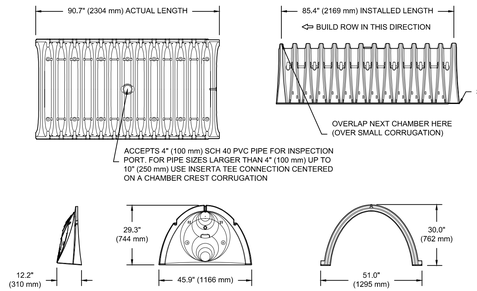

NOMINAL CHAMBER SPECIFICATIONS

SIZE (W X H X INSTALLED LENGTH)	51.0" X 30.0" X 85.4"	(1295 mm X 762 mm X 2169 mm)
CHAMBER STORAGE	45.9 CUBIC FEET	(1.30 m^3)
MINIMUM INSTALLED STORAGE*	74.9 CUBIC FEET	(2.12 m^3)
WEIGHT	75.0 lbs.	(33.6 kg)

*ASSUMES 6" (152 mm) STONE ABOVE, BELOW, AND BETWEEN CHAMBERS

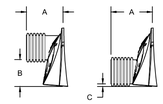

STUBS AT BOTTOM OF END CAP FOR PART NUMBERS ENDING WITH "B"
STUBS AT TOP OF END CAP FOR PART NUMBERS ENDING WITH "T"

PART #	STUB	A	B	C
SC740EPE06T / SC740EPE06TPC	6" (150 mm)	10.9" (277 mm)	18.5" (470 mm)	---
SC740EPE06B / SC740EPE06BPC			---	0.5" (13 mm)
SC740EPE08T /SC740EPE08TPC	8" (200 mm)	12.2" (310 mm)	16.5" (419 mm)	---
SC740EPE08B / SC740EPE08BPC			---	0.8" (15 mm)
SC740EPE10T / SC740EPE10TPC	10" (250 mm)	13.4" (340 mm)	14.5" (368 mm)	---
SC740EPE10B / SC740EPE10BPC			---	0.7" (18 mm)
SC740EPE12T / SC740EPE12TPC	12" (300 mm)	14.7" (373 mm)	12.5" (318 mm)	---
SC740EPE12B / SC740EPE12BPC			---	1.2" (30 mm)
SC740EPE15T / SC740EPE15TPC	15" (375 mm)	18.4" (467 mm)	9.0" (229 mm)	---
SC740EPE15B / SC740EPE15BPC			---	1.3" (33 mm)
SC740EPE18T / SC740EPE18TPC	18" (450 mm)	19.7" (500 mm)	5.0" (127 mm)	---
SC740EPE18B / SC740EPE18BPC			---	1.6" (41 mm)
SC740EPE24B*	24" (600 mm)	18.5" (470 mm)	---	0.1" (3 mm)

ALL STUBS, EXCEPT FOR THE SC740EPE24B ARE PLACED AT BOTTOM OF END CAP SUCH THAT THE OUTSIDE DIAMETER OF THE STUB IS FLUSH WITH THE BOTTOM OF THE END CAP. FOR ADDITIONAL INFORMATION CONTACT STORMTECH AT 1-888-892-2694.

* FOR THE SC740EPE24B THE 24" (600 mm) STUB LIES BELOW THE BOTTOM OF THE END CAP APPROXIMATELY 1.75" (44 mm), BACKFILL MATERIAL SHOULD BE REMOVED FROM BELOW THE N-12 STUB SO THAT THE FITTING SITS LEVEL.

NOTE: ALL DIMENSIONS ARE NOMINAL

STORMTECH SC-740 TECHNICAL SPECIFICATION
NOT TO SCALE

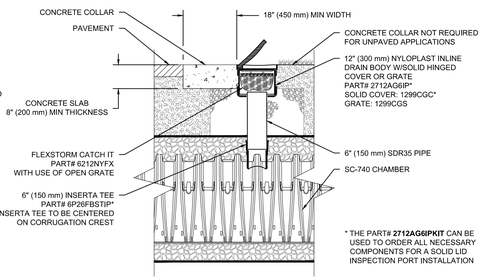

SC-740 6" INSPECTION PORT DETAIL
NOT TO SCALE

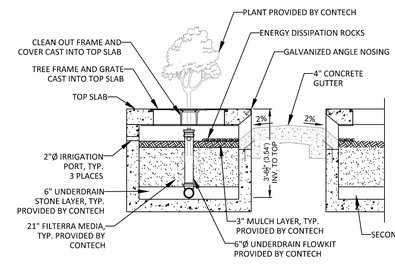

STORMWATER CHAMBER SPECIFICATIONS

1. CHAMBERS SHALL BE STORMTECH SC-740 OR APPROVED EQUAL.
2. CHAMBERS SHALL BE MANUFACTURED FROM VIRGIN POLYPROPYLENE OR POLYETHYLENE RESINS TESTED USING ASTM STANDARDS.
3. CHAMBERS SHALL BE DESIGNED IN ACCORDANCE WITH ASTM F2787, "STANDARD PRACTICE FOR STRUCTURAL DESIGN OF THERMOPLASTIC CORRUGATED WALL STORMWATER COLLECTION CHAMBERS".
4. CHAMBER ROWS SHALL PROVIDE CONTINUOUS, UNOBSTRUCTED INTERNAL SPACE WITH NO INTERNAL SUPPORT PANELS.
5. THE STRUCTURAL DESIGN OF THE CHAMBERS, THE STRUCTURAL BACKFILL AND THE INSTALLATION REQUIREMENTS SHALL ENSURE THAT THE LOAD FACTORS SPECIFIED IN THE AASHTO LRFD BRIDGE DESIGN SPECIFICATIONS, SECTION 12.12 ARE MET FOR: 1) LONG-DURATION DEAD LOADS AND 2) SHORT-DURATION LIVE LOADS, BASED ON THE AASHTO DESIGN TRUCK WITH CONSIDERATION FOR IMPACT AND MULTIPLE VEHICLE PRESENCE.
6. ONLY CHAMBERS THAT ARE APPROVED BY THE ENGINEER WILL BE ALLOWED. THE CONTRACTOR SHALL SUBMIT (3 SETS) OF THE FOLLOWING TO THE ENGINEER FOR APPROVAL BEFORE DELIVERING CHAMBERS TO THE PROJECT SITE:
   a. A STRUCTURAL EVALUATION BY A REGISTERED STRUCTURAL ENGINEER THAT DEMONSTRATES THAT THE LOAD FACTORS SPECIFIED IN THE AASHTO LRFD BRIDGE DESIGN SPECIFICATIONS, SECTION 12.12 ARE MET. THE 50-YEAR CREEP MODULUS DATA SPECIFIED IN ASTM F2922 MUST BE USED AS A PART OF THE AASHTO STRUCTURAL EVALUATION TO VERIFY LONG-TERM PERFORMANCE.
7. CHAMBERS SHALL BE PRODUCED AT AN ISO 9001 CERTIFIED MANUFACTURING FACILITY.
8. ALL DESIGN SPECIFICATIONS FOR CHAMBERS SHALL BE IN ACCORDANCE WITH THE MANUFACTURER'S LATEST DESIGN MANUAL.
9. THE INSTALLATION OF CHAMBERS SHALL BE IN ACCORDANCE WITH THE MANUFACTURER'S LATEST INSTALLATION INSTRUCTIONS.

MANUFACTURER'S GENERAL NOTES

1. STORMTECH REQUIRES INSTALLING CONTRACTORS TO USE AND UNDERSTAND STORMTECH'S LATEST INSTALLATION INSTRUCTIONS PRIOR TO BEGINNING SYSTEM INSTALLATION.
2. OUR TECHNICAL SERVICES DEPARTMENT OFFERS INSTALLATION CONSULTATIONS TO INSTALLING CONTRACTORS. CONTACT OUR TECHNICAL SERVICES REPRESENTATIVE AT LEAST 30 DAYS PRIOR TO SYSTEM INSTALLATION TO ARRANGE A PRE-INSTALLATION CONSULTATION. OUR REPRESENTATIVES CAN THEN ANSWER QUESTIONS OR ADDRESS COMMENTS ON THE STORMTECH CHAMBER SYSTEM AND INFORM THE INSTALLING CONTRACTOR OF THE MINIMUM INSTALLATION REQUIREMENTS BEFORE BEGINNING THE SYSTEM'S CONSTRUCTION. CALL **1-888-892-2694** TO SPEAK TO A TECHNICAL SERVICES REPRESENTATIVE OR VISIT **WWW. STORMTECH.COM** TO RECEIVE A COPY OF OUR INSTALLATION INSTRUCTIONS.
3. STORMTECH'S REQUIREMENTS FOR SYSTEMS WITH PAVEMENT DESIGN (ASPHALT, CONCRETE PAVERS, ETC.):MINIMUM COVER IS 18" [457 mm] NOT INCLUDING PAVEMENT; MAXIMUM COVER IS 96" [2438 mm] INCLUDING PAVEMENT. FOR INSTALLATIONS THAT DO NOT INCLUDE PAVEMENT, WHERE RUTTING FROM VEHICLES MAY OCCUR, MINIMUM REQUIRED COVER IS 24" [610 mm], MAXIMUM COVER IS 96" [2.438 m].
4. THE CONTRACTOR MUST REPORT ANY DISCREPANCIES WITH CHAMBER FOUNDATION MATERIALS BEARING CAPACITIES TO THE DESIGN ENGINEER.
5. AASHTO M288 CLASS 2 NON-WOVEN GEOTEXTILE (FILTER FABRIC) MUST BE USED AS INDICATED IN THE PROJECT PLANS.
6. STONE PLACEMENT BETWEEN CHAMBERS ROWS AND AROUND PERIMETER MUST FOLLOW INSTRUCTIONS AS INDICATED IN THE MOST CURRENT VERSION OF STORMTECH'S INSTALLATION INSTRUCTIONS.
7. BACKFILLING OVER THE CHAMBERS MUST FOLLOW REQUIREMENTS AS INDICATED IN THE MOST CURRENT VERSION OF STORMTECH'S INSTALLATION INSTRUCTIONS.
8. THE CONTRACTOR MUST REFER TO STORMTECH'S INSTALLATION INSTRUCTIONS FOR A TABLE OF ACCEPTABLE VEHICLE LOADS AT VARIOUS DEPTHS OF COVER. THIS INFORMATION IS ALSO AVAILABLE AT STORMTECH'S WEBSITE: **WWW.STORMTECH.COM**. THE CONTRACTOR IS RESPONSIBLE FOR PREVENTING VEHICLES THAT EXCEED STORMTECH'S REQUIREMENTS FROM TRAVELING ACROSS OR PARKING OVER THE STORMWATER SYSTEM. TEMPORARY FENCING, WARNING TAPE AND APPROPRIATELY LOCATED SIGNS ARE COMMONLY USED TO PREVENT UNAUTHORIZED VEHICLES FROM ENTERING SENSITIVE CONSTRUCTION AREAS.
9. THE CONTRACTOR MUST APPLY EROSION AND SEDIMENT CONTROL MEASURES TO PROTECT THE STORMWATER SYSTEM DURING ALL PHASES OF SITE CONSTRUCTION PER LOCAL CODES AND DESIGN ENGINEER'S SPECIFICATIONS.
10. STORMTECH PRODUCT WARRANTY IS LIMITED. SEE CURRENT PRODUCT WARRANTY FOR DETAILS. TO ACQUIRE A COPY CALL STORMTECH AT **1-888-892-2694** OR VISIT **WWW.STORMTECH.COM**

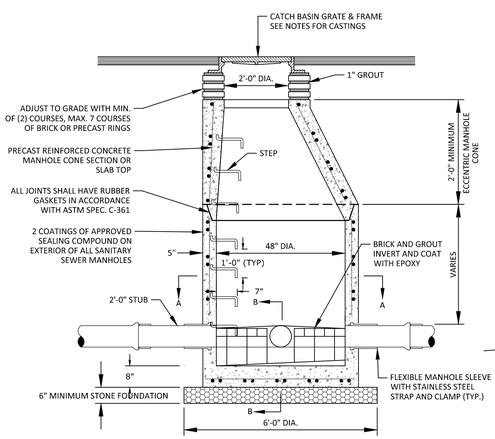

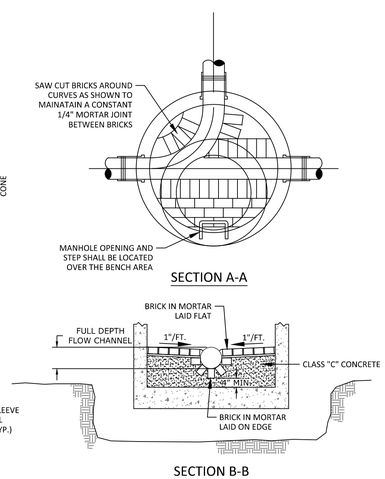

NOTES:

1. SOLID COVER TO BE EAST JORDAN IRON WORKS PRODUCT NUMBER 00104175 OR APPROVED EQUAL AND SHALL BE MARKED "SANITARY SEWER". FRAME TO BE EAST JORDAN IRONWORKS PRODUCT NUMBER 00104510 OR APPROVED EQUAL.
2. CONNECTIONS TO EXISTING SANITARY MANHOLES TO BE APPROVED BY SEWER DISTRICT AND CORE DRILLED WITH FLEXIBLE BOOT.
3. MANHOLE CHANNELS REQUIRING CHANGE IN ALIGNMENT ARE TO BE BUILT ON A SMOOTH RADIUS. IF SIDE PIPES ENTER CHANNEL, SHAPE TO RECEIVE ADDED SIDE FLOW (SEE SECTION A-A).
4. USE FLAT SLAB TOP MANHOLE WHEN THE DIFFERENCE BETWEEN INVERT AND RIM IS LESS THAN 6'-0" AND WHEN MANHOLE DIAMETER IS GREATER THAN 4'-0".
5. AVERAGE STRENGTH OF CONCRETE TO BE 4,000 PSI AT 28 DAYS. STRUCTURE TO BE DESIGNED FOR H-20 LOADING.

PRECAST CONCRETE SANITARY MANHOLE
NOT TO SCALE

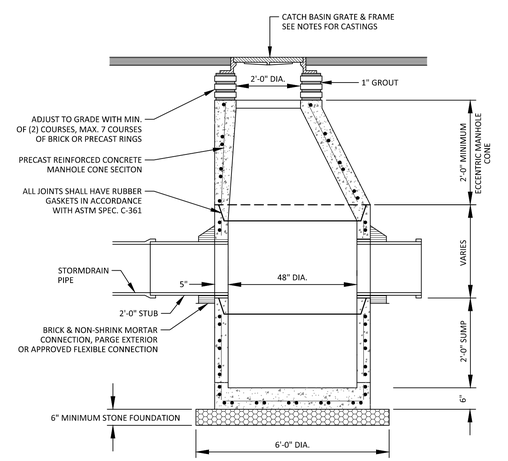

NOTES:

1. LARGER DIAMETER STRUCTURES MAY BE REQUIRED DUE TO SIZE OR GEOMETRY OF PIPE CONNECTIONS AT MANHOLE. WALL THICKNESS TO INCREASE BY 1" FOR EACH 1'-0" DIA. INCREASE. PROVIDE SHOP DRAWINGS.
2. DRAINAGE STRUCTURES TO BE DESIGNED FOR H-20 LOADING.
3. CAST IRON GRATES SHALL BE EQUAL TO EAST JORDAN IRON WORKS, PRODUCT NO. 45622531C01, HEAVY DUTY GRATE OR ENGINEER APPROVED EQUAL. SUBMIT CATALOG SHEETS TO ENGINEER FOR APPROVAL.

PRECAST CONCRETE CATCH BASIN
NOT TO SCALE

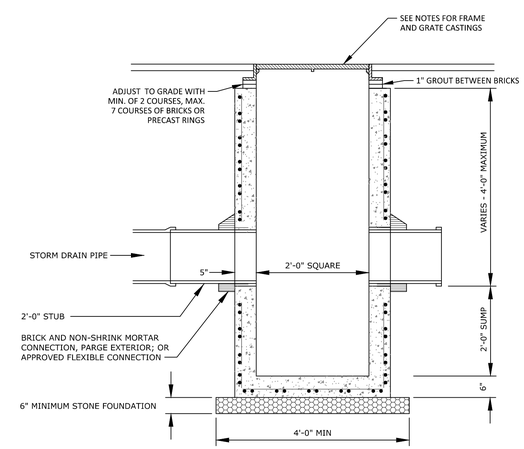

NOTES:

1. CAST IRON FRAME SHALL BE EQUAL TO EAST JORDAN IRON WORKS, PRODUCT NO. 45622011, REVERSIBLE FRAME AND GRATE SHALL BE EQUAL TO EAST JORDAN IRON WORKS, PRODUCT NO. 45622531, HEAVY DUTY GRATE.
2. SUBMIT SHOP DRAWINGS AND CASTING SPECIFICATIONS TO ENGINEER FOR APPROVAL.

PRECAST CONCRETE CATCH BASIN STRUCTURE - TYPE F
NOT TO SCALE

PRELIMINARY PLAN NOT FOR CONSTRUCTION

STATE OF MAINE JAYSON R. HASKELL No. 13002 LICENSED PROFESSIONAL ENGINEER 11-18-19

DM ROMA
CONSULTING ENGINEERS
P.O. BOX 1116
WINDHAM, ME 04062
(207) 310 - 0506

REV.	DATE	BY	DESCRIPTION
A	11-18-19	DMR	ISSUED FOR PRELIMINARY SUBDIVISION REVIEW

DETAILS

DEPOT STREET RESIDENTIAL DEVELOPMENT
DEPOT STREET
WINDHAM, MAINE

FOR RECORD OWNER:
MCL REALTY, LLC
PO BOX 1206
WINDHAM, ME 04062

17035
JOB NUMBER:

AS NOTED
SCALE:

11-18-2019
DATE: